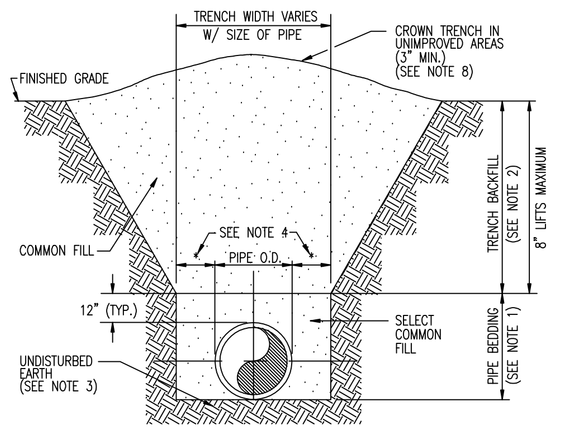

NOTES:

1. PIPE BEDDING: SELECT COMMON FILL COMPACTED TO 100% OF THE MAXIMUM DENSITY AS PER ASHTO T-99-C.
2. TRENCH BACKFILL: COMMON FILL COMPACTED TO 100% OF THE MAXIMUM DENSITY AS PER ASHTO T-99-C.
3. PIPE BEDDING UTILIZING SELECT COMMON FILL OR BEDDING ROCK IN ACCORDANCE WITH TYPE A BEDDING AND TRENCHING DETAIL MAY BE REQUIRED AS DIRECTED BY THE CITY OF COCONUT CREEK.
4. (*): 15" MAX. FOR PIPE DIAMETER LESS THAN 24", AND 24" MAX. FOR PIPE DIAMETER 24" AND LARGER.
5. WATER SHALL NOT BE PERMITTED IN THE TRENCH DURING CONSTRUCTION.
6. ALL PIPE TO BE INSTALLED WITH BELL FACING UPSTREAM TO THE DIRECTION OF THE FLOW.
7. REFER TO SECTION 2.18-E OF THE MANUAL FOR SHEETING AND BRACING IN EXCAVATIONS.
8. FINAL RESTORATION IN IMPROVED AREAS SHALL BE IN COMPLIANCE WITH ALL APPLICABLE REGULATIONS OF GOVERNING AGENCIES. SURFACE RESTORATION WITHIN CITY OR COUNTY RIGHT-OF-WAY SHALL COMPLY WITH THE APPLICABLE REGULATIONS.

Date	Revisions	Appr. by	CITY OF COCONUT CREEK UTILITIES AND ENGINEERING DEPARTMENT			
			TYPE B BEDDING AND TRENCHING DETAIL			
Date: Nov. 1999	Scale: N.T.S.	Dwg: F010	Fig: 010			

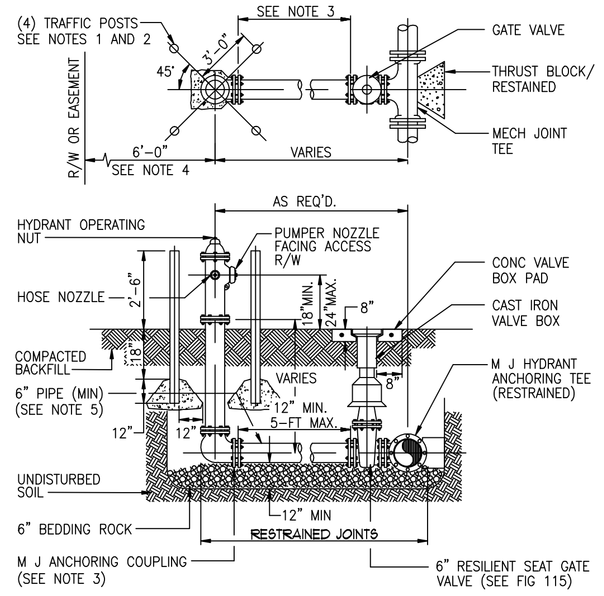

NOTES:

1. HYDRANT GUARDS TO BE 4" DIAMETER GALVANIZED STEEL PIPE FILLED WITH CONCRETE AND TO BE PLACED AT LOCATION AS REQUESTED BY THE CITY ENGINEER.
2. OMIT REAR GUARDS IN LOCATION WHERE SIDEWALKS EXIST.
3. USE MECHANICAL JOINT RETAINER GLAND CLOW MODEL NO. F1058 OR APPROVED EQUAL.
4. HYDRANT SETBACK SHALL BE SET TO A DISTANCE OF 7-FT MAXIMUM AND 4-FT MINIMUM FROM THE EDGE OF PAVEMENT OR CONFORM TO D.O.T. REQUIREMENTS WHERE APPLICABLE.
5. SERVICE LINES FOR FIRE HYDRANTS TO BE SIZED TO ALLOW A MINIMUM OF 20 PSI RESIDUAL PRESSURE AT THE HYDRANT UNDER FIRE FLOW CONDITIONS.
6. TWO BLUE REFLECTIVE PAVEMENT MARKERS FOR IDENTIFICATION OF THE HYDRANT AND ITS VALVE LOCATION SHALL BE INSTALLED ON THE CENTER OF THE ADJACENT PAVED DRIVE LANE TO THE HYDRANT; MARKERS SHALL BE SPACED 1-FT APART, PERPENDICULAR TO THE ROAD CENTERLINE.

Date	Revisions	Appr. by	CITY OF COCONUT CREEK UTILITIES AND ENGINEERING DEPARTMENT			
			FIRE HYDRANT ASSEMBLY DETAIL			
Date: Nov. 1999	Scale: N.T.S.	Dwg: F103	Fig: 103			

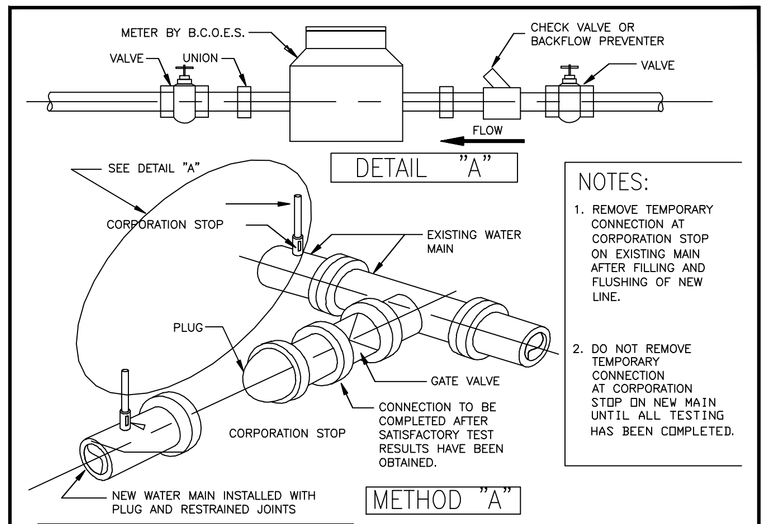

NOTES:

1. REMOVE TEMPORARY CONNECTION AT CORPORATION STOP ON EXISTING MAIN AFTER FILLING AND FLUSHING OF NEW LINE.
2. DO NOT REMOVE TEMPORARY CONNECTION AT CORPORATION STOP ON NEW MAIN UNTIL ALL TESTING HAS BEEN COMPLETED.

NOTES:

1. REMOVE TEMPORARY CONNECTION AT CORPORATION STOPS ON NEW MAIN AFTER FILING AND FLUSHING HAS BEEN COMPLETED.

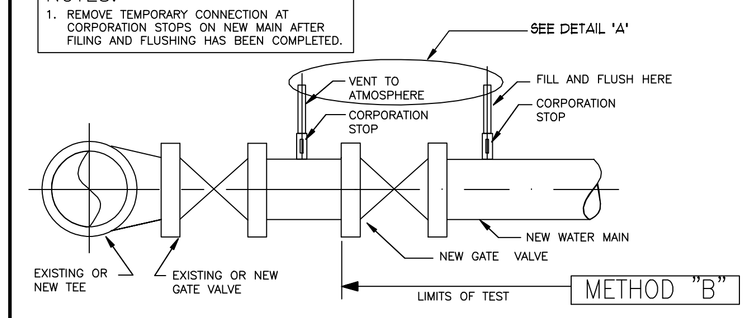

Date	Revisions	Appr. by	CITY OF COCONUT CREEK UTILITIES AND ENGINEERING DEPARTMENT			
			FILLING AND FLUSHING DETAIL			
Date: Nov. 1999	Scale: N.T.S.	Dwg: F104	Fig: 104			

NOTE:

FL 90° BEND AND FL 45° BEND ARE SHOWN ROTATED 90° FOR CLARITY. CONSTRUCT DISCHARGE PARALLEL TO RIGHT OF WAY/EASEMENT.

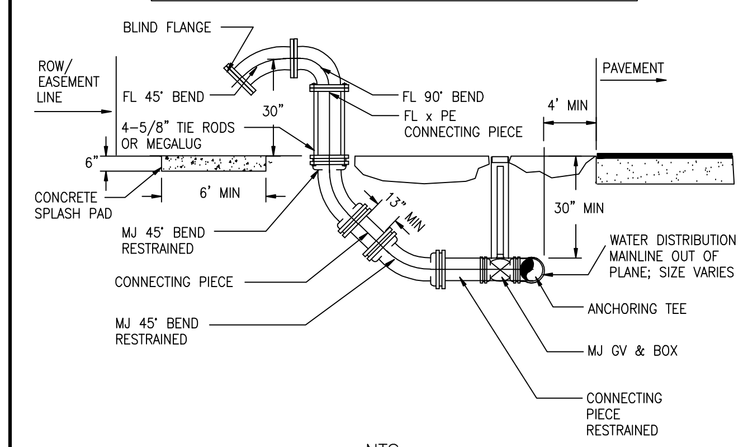

NTS

NOTES:

1. THIS DETAIL GRAPHICALLY REPRESENTS THE LAYOUT AND CONFIGURATION REQUIRED. THE DESIGN ENGINEER SHALL SIZE THE PIPING TO ENSURE THAT A MINIMUM VELOCITY OF 2.5 FPS IS OBTAINED IN THE PRIMARY WATER DISTRIBUTION SYSTEM MAINLINE.
2. FULL JOINT RESTRAINT IS REQUIRED; THRUST CALCULATIONS ARE NECESSARY.
3. EROSION CONTROL IS ESSENTIAL TO SATISFACTORY PERFORMANCE AND SHALL BE CONSIDERED IN THE DESIGN.
4. OTHER DESIGNS MAY BE APPROVED BY THE CITY'S UTILITIES AND ENGINEERING DIRECTOR WHO WILL HAVE SOLE DISCRETION OF APPROVAL. FIRE HYDRANTS MAY BE AN ACCEPTABLE ALTERNATIVE.

Date	Revisions	Appr. by	CITY OF COCONUT CREEK UTILITIES AND ENGINEERING DEPARTMENT			
			CANON FLUSH DETAIL			
Date: DEC. 1999	Scale: N.T.S.	Dwg: F105x	Fig: 105			

MINIMUM LENGTH (FT) TO BE RESTRAINED ON EACH SIDE OF FITTING(S). *									
	PIPE SIZE								
	6"	8"	10"	12"	16"	20"	24"	30"	36"
90° BEND	54	72	90	90	108				
45° BEND	36	36	36	36	54				
22-1/2° BEND	18	18	18	18	18				
11-1/4° BEND	18	18	18	18	18				
PLUG OR BRANCH OF TEE	54	72	90	90	108				

* SEE NOTE 7.

NOTES:

1. FITTINGS SHALL BE RESTRAINED JOINTS UNLESS OTHERWISE INDICATED.
2. INSTALL FULL LENGTH JOINTS WITH TOTAL LENGTH EQUAL TO OR GREATER THAN SHOWN IN THE TABLE.
3. WHERE TWO OR MORE FITTINGS ARE TOGETHER, USE FITTING WHICH YIELDS GREATEST LENGTH OF RESTRAINED PIPE.
4. IN LINE VALVES AND THROUGH RUN OF TEES OUTSIDE LIMITS OF RESTRAINED JOINTS FROM OTHER FITTINGS NEED NOT BE RESTRAINED UNLESS OTHERWISE INDICATED.
5. LENGTHS SHOWN IN THE TABLE HAVE BEEN CALCULATED IN ACCORDANCE WITH THE PROCEDURE OUTLINED IN "THRUST RESTRAINT DESIGN FOR DUCTILE IRON PIPE" AS PUBLISHED BY DIPRA, WITH THE FOLLOWING ASSUMPTIONS:

   WORKING PRESSURE: 150 P.S.I.*
   SOIL DESIGNATION: SAND *
   LAYING CONDITIONS: 3-FEET *(BURY)

6. FOR PIPE ENCASED IN POLYETHYLENE, USE VALUES GIVEN IN PARENTHESES OR INCREASE THE GIVEN VALUE BY A FACTOR OF 1.5.
7. TO BE COMPLETED BY THE DESIGN ENGINEER.

Date	Revisions	Appr. by	CITY OF COCONUT CREEK UTILITIES AND ENGINEERING DEPARTMENT			
			RESTRAINED PIPE DETAIL			
Date: Nov 1999	Scale: N.T.S.	Dwg: F108	Fig: 108			

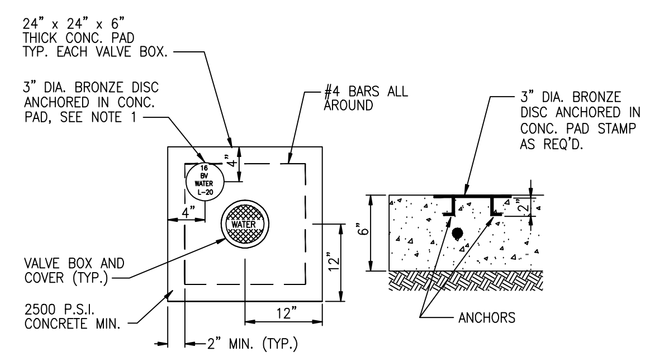

UNIMPROVED CONDITION

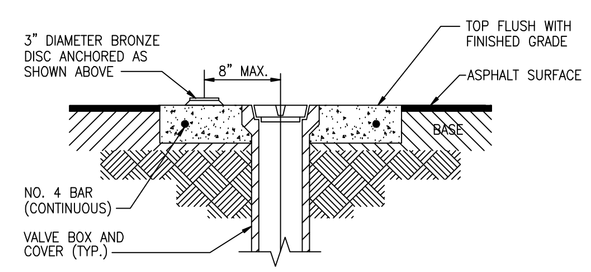

ALTERNATIVE FOR IMPROVED CONDTITION

NOTES:

1. BRONZE DISC TO BE SUPPLIED BY CITY.
2. AMERICAN FLOW CONTROL TRENCH ADAPTER VALVE BOX AND EXTENSION IS PREFERRED.

Date	Revisions	Appr. by	CITY OF COCONUT CREEK UTILITIES AND ENGINEERING DEPARTMENT			
			VALVE COLLAR DETAIL			
Date: Nov. 1999	Scale: N.T.S.	Dwg: F111	Fig: 111			

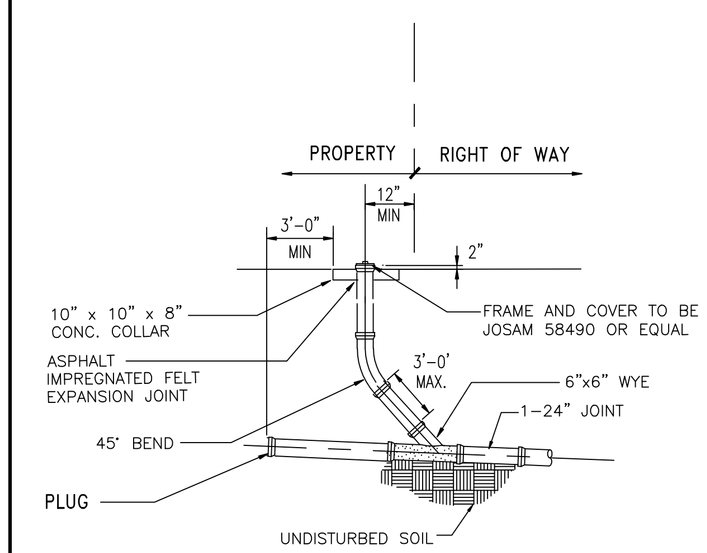

Date	Revisions	Appr. by	CITY OF COCONUT CREEK UTILITIES AND ENGINEERING DEPARTMENT			
			SANITARY SERVICE CLEANOUT DETAIL			
Date: Dec. 1999	Scale: N.T.S.	Dwg: F206	Fig: 206			

anderson architecture, inc.
399 CAMINO GARDENS BLVD.
SUITE 202
BOCA RATON, FLORIDA 33432
V: 561.362.0220
F: 561.362.0224
www.andersonarchitecture.com

consultant:

CAMERO + ASSOCIATES, INC.
CIVIL ENGINEERING
CAMERO + ASSOCIATES INC.
1000 CORPORATE DRIVE, SUITE 200
FORT LAUDERDALE, FL 33334
PHONE (954) 776-0160
FAX (954) 938-0287
JORGE L. CAMERO, P.E.
CHARLES J. FUCHSLOCH, P.E.
CERTIFICATE OF AUTHORIZATION NO. 6746
EB NO. 0000070
FL LICENSE NO. 17010
BUS. LICENSE NO. 13-175

seal:

A DRC SUBMITTAL FOR:
AMERICAN TOP TEAM
STATE ROAD 7 (US 441)
COCONUT CREEK, BROWARD COUNTY, FLORIDA

revision: | date:

commission: 01-28-14
principal: JORGE L. CAMERO
project manager: JLC/FA
file name: OUR JOB NO. 13-175
date: 01-28-14
title: WATER + SEWER DETAILS

C-5

of: C-6

AA C001997