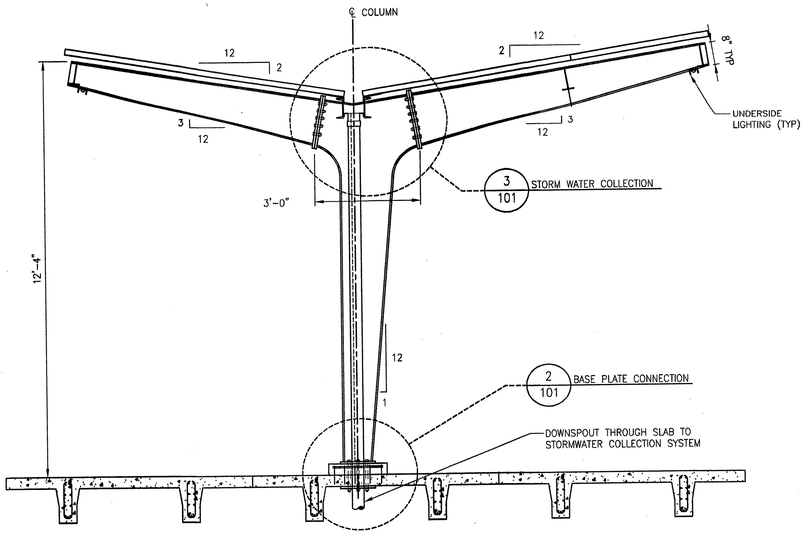

1/101 SUPPORT FRAME
SCALE: 1/2" = 1'-0"

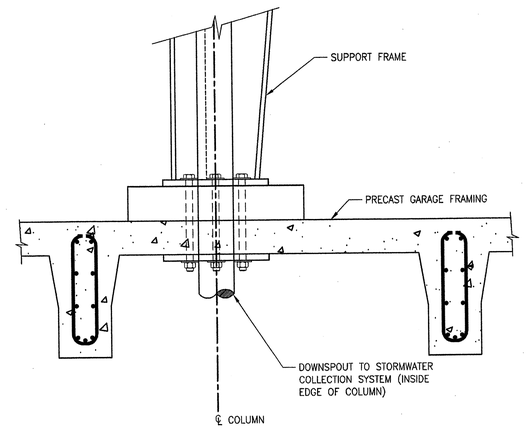

2/101 BASE PLATE CONNECTION DETAIL
SCALE: 1-1/2" = 1'-0"

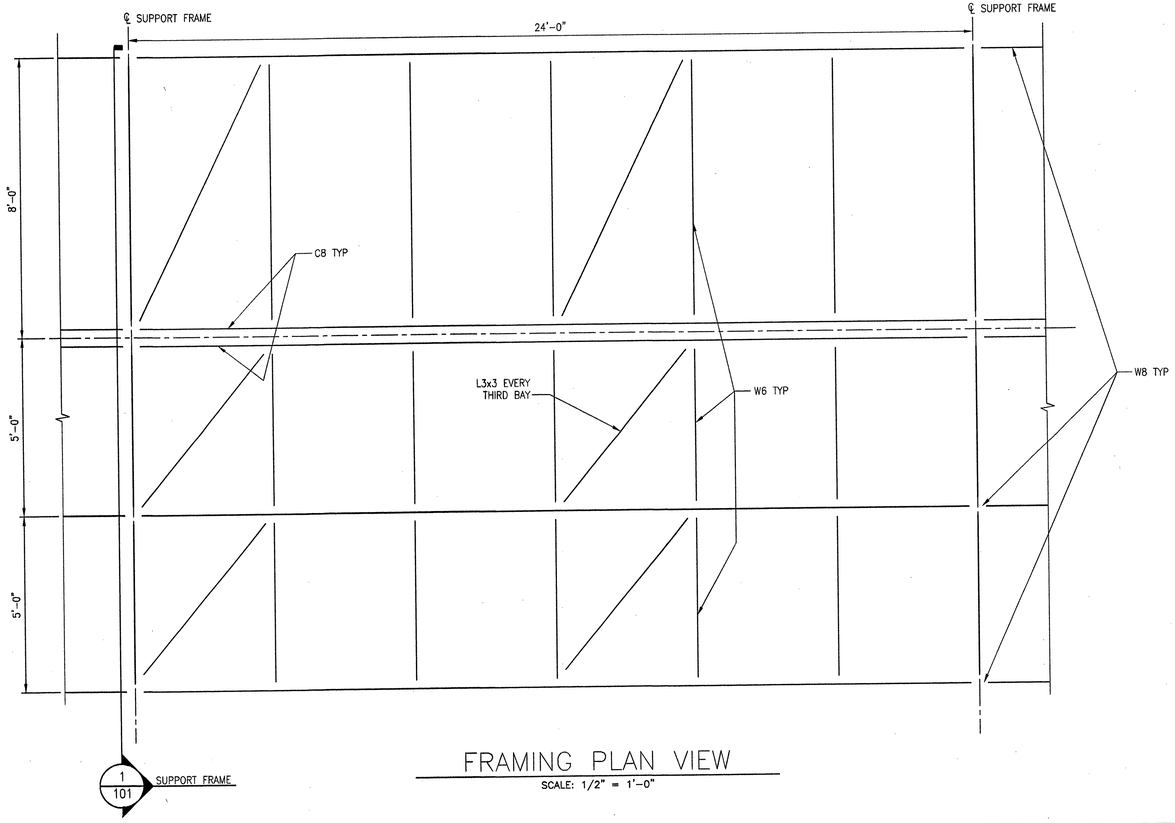

FRAMING PLAN VIEW
SCALE: 1/2" = 1'-0"

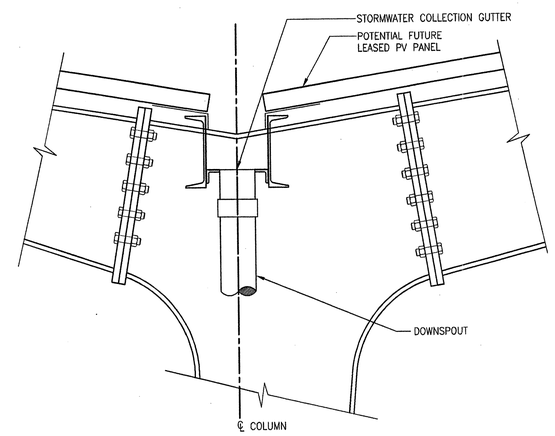

3/101 STORMWATER COLLECTION DETAIL
SCALE: 1-1/2" = 1'-0"

Δ	Date	Description

EDSA
PLANNERS - LANDSCAPE ARCHITECTURE - URBAN DESIGN - GRAPHIC DESIGN
1512 E. BROWARD BOULEVARD, SUITE 110
FORT LAUDERDALE, FLORIDA 33301 USA
TEL 954.467.1688

Michael Singer Inc.
South Studio - Delray Beach, FL
561-2671-2044
msi@michaelsinger.com

ASSOCIATES, INC.
planners - engineers - landscape architects
engineers - architects - surveyors - construction managers

FRIEDMUTTER GROUP
ARCHITECTURE • ENGINEERING • LANDSCAPE ARCHITECTURE • PLANNING
SURVEYING • MAPPING • GIS • CONSTRUCTION MANAGEMENT
3250 SW 3rd AVENUE MIAMI, FLORIDA 33129 (305) 858-1727
FAX (305) 858-2383 • EMAIL: fg@friedmutter.com • WEB SITE: www.friedmutter.com
FLORIDA CERTIFICATE OF AUTHORIZATION: AA-26000635 • EB-0000635

KEITH and SCHNARS, P.A.
ENGINEERS, PLANNERS, SURVEYORS

STAMP

PROJECT NAME

PHASE I TRANSPORTATION CENTER

SEMINOLE COCONUT CREEK CASINO
SEMINOLE TRIBE OF INDIANS
5600 NW 40TH STREET
COCONUT CREEK, FLORIDA 33073

DRAWN BY
P. Zulick

CHECKED BY
J. Bregman

ISSUE DATE
04/17/08

JOB NUMBER
212A005

SHEET NAME
GARAGE SOLAR PV AND WATER HARVESTING SHADE CANOPY

SHEET NUMBER
G-1.3