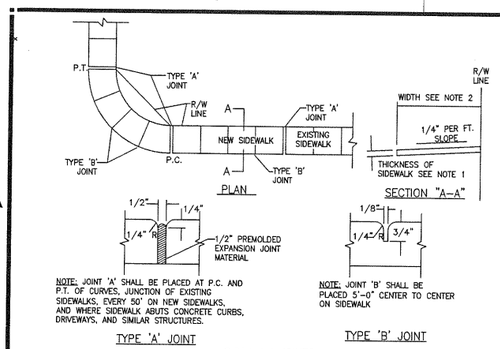

SIDEWALK JOINTS

NOTES

1) SIDEWALK THICKNESS IN RESIDENTIAL AREAS SHALL BE 4" THICK. THICKNESS IN COMMERCIAL AREAS AND IN DRIVEWAYS SHALL BE 6".
2) SIDEWALK WIDTHS SHALL BE 4' WIDE ON LOCAL STREETS AND 5' WIDE ON ALL OTHERS.

SIDEWALK DETAIL

N.T.S

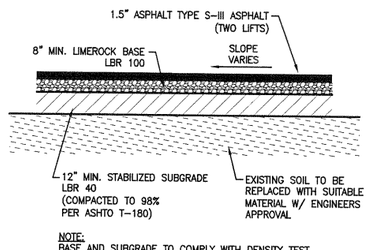

NOTE:
BASE AND SUBGRADE TO COMPLY WITH DENSITY TEST REQUIREMENT OF 98% COMPACTION OF MAXIMUM DENSITY PER AASHTO T-180

PAVEMENT SECTION

N.T.S.

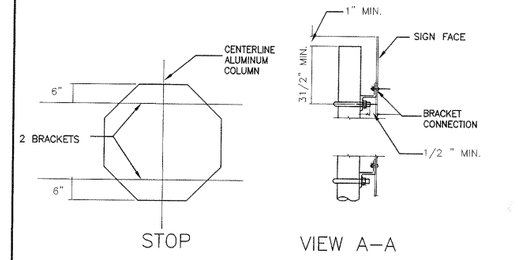

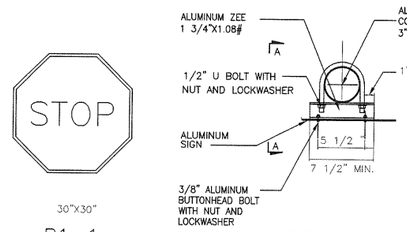

NOTES:
1. STOP SIGNS SHALL HAVE REFLECTIVE RED BACKGROUND AND WHITE LETTERING.
2. ALL SIGNS SHALL BE ACCORDING TO MUTCD. MANUAL OF UNIFORM TRAFFIC CONTROL DEVICES.

Date	Revisions	Appr. by	CITY OF COCONUT CREEK UTILITIES AND ENGINEERING DEPARTMENT			
			STOP SIGN AND TYPICAL SIGN BRACKET DETAIL			
			Date: Feb. 2000	Scale: N.T.S.	Dwg: F313	Fig: 313

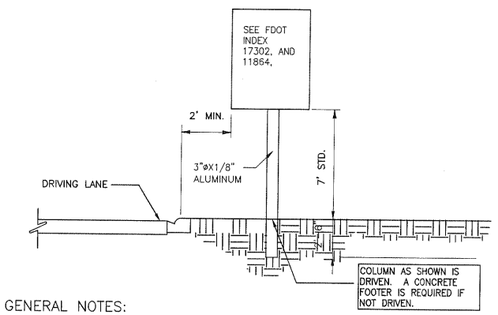

GENERAL NOTES:

1. The typical section shown here serves as a guide for locating the traffic signs required under various roadside conditions. For size and details of sign construction and footing, refer to the appropriate FDOTstandard index drawing for roadside sign.
2. It shall be the CONTRACTORS respon – sibility to verify the length of sign supports in the field prior to fabrication.
3. Roadside signs shall be installed at an angle of 1 to 4 degrees away from the traffic flow(see illustration). Shoulder mounted signs shall be rotated counterclockwise and median mounted signs rotated clockwise. Signs on curves shall be mounted as noted above from the perpendicular to the motorists line of sight.

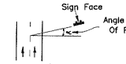

4. The setback for stop and yield signs may be reduced to 3' minimum from the driving lane if required for visibility in business or residential sections with no curb and speeds of 30 MPH or less.
5. The mounting heights are measured from the bottom of the sign panel to a horizontal line extended from the edge of the driving lane. If the standard heights cannot be met, the minimum heights are follows:

Expressway & Freeway Systems	7'
Other Roadway Systems	
Rural	5'
Urban (including residential with parking and/or pedestrian activity)	7'

If a secondary sign is mounted below the major sign,the major sign shall be at least 8' and the secondary sign at least 5' for expressway & freeway systems and for other systems the height to the secondary sign shall be at least 4' for rural and 6' for urban sections.

6. Sign supports should never be placed in ditches where erosion might affect the proper operation of the breakaway feature. It is also possible that a vehicle entering the ditch might be guided into the support.

Date	Revisions	Appr. by	CITY OF COCONUT CREEK UTILITIES AND ENGINEERING DEPARTMENT			
			TYPICAL ROADSIDE SIGN PLACEMENT DETAIL			
			Date: Feb. 2000	Scale: N.T.S.	Dwg: F313A	Fig: 313A

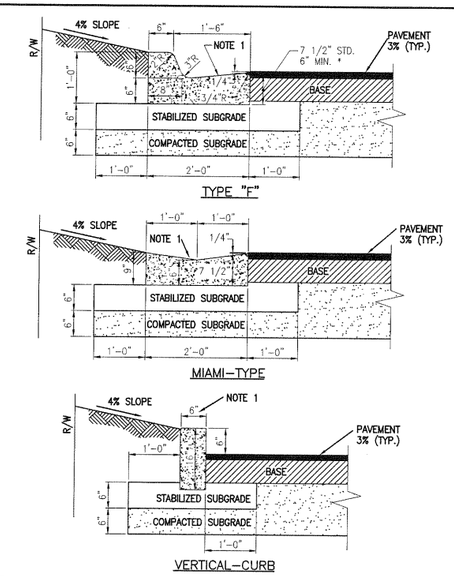

NOTE:
1. USE AN ALTERNATE ONLY PER ENGINEER DESIGN AND AND CITY APPROVAL; OR, AS CONTIGUOUS TO SPECIAL PAVERS.

Date	Revisions	Appr. by	CITY OF COCONUT CREEK UTILITIES AND ENGINEERING DEPARTMENT			
			CURB AND GUTTER DETAILS			
			Date: Dec. 1999	Scale: N.T.S.	Dwg: F308	Fig: 308

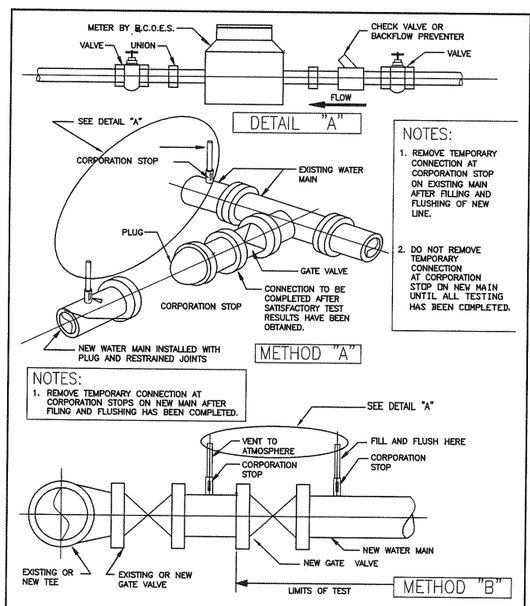

NOTES:
1. REMOVE TEMPORARY CONNECTION AT CORPORATION STOP ON EXISTING MAIN AFTER FILLING AND FLUSHING OF NEW LINE.
2. DO NOT REMOVE TEMPORARY CONNECTION AT CORPORATION STOP ON NEW MAIN UNTIL ALL TESTING HAS BEEN COMPLETED.

NOTES:
1. REMOVE TEMPORARY CONNECTION AT CORPORATION STOPS ON NEW MAIN AFTER FILING AND FLUSHING HAS BEEN COMPLETED.

Date	Revisions	Appr. by	CITY OF COCONUT CREEK UTILITIES AND ENGINEERING DEPARTMENT			
			FILLING AND FLUSHING DETAIL			
			Date: Nov. 1999	Scale: N.T.S.	Dwg: F104	Fig: 104

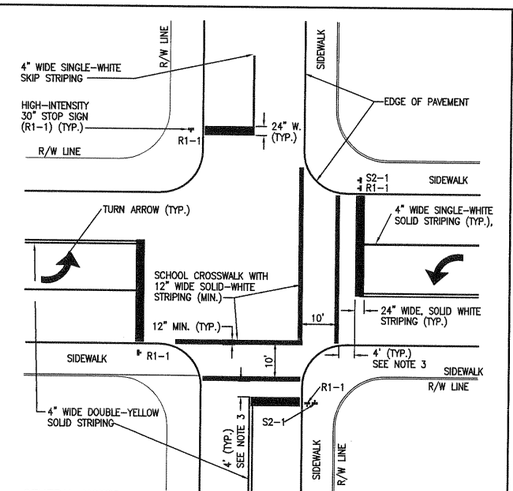

GENERAL NOTES:

1. ALL PAVEMENT MARKINGS AND SIGNING SHALL BE IN ACCORDANCE WITH THE "MANUAL ON UNIFORM TRAFFIC CONTROL DEVICES FOR STREET AND HIGHWAYS," UNLESS SPECIFIED OTHERWISE.
2. SEE FIGURE 307 FOR ADDITIONAL SIGNAGE, MARKING AND CROSSWALK DETAILS.
3. 4-FEET DISTANCE ACROSS TWO-LANE RESIDENTIAL STREETS; 40-FEET DISTANCE FOR FOUR TO SIX-LANE HIGHWAY.
4. DOUBLE-SIGNING SHALL BE INSTALLED BY WORK ORDER REQUEST.

SOURCE: BROWARD COUNTY PUBLIC WORKS ENGINEERING DIVISION MINIMUM STANDARDS, APRIL 1995

Date	Revisions	Appr. by	CITY OF COCONUT CREEK UTILITIES AND ENGINEERING DEPARTMENT			
			PAVEMENT SIGNING AND MARKING DETAILS			
			Date: Dec. 1999	Scale: N.T.S.	Dwg: F306	Fig: 306

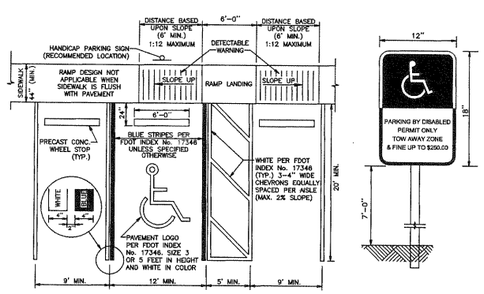

TYPICAL HANDICAP PARKING DETAIL

(N.T.S.)

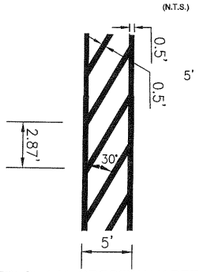

PEDESTRIAN CROSSWALK DETAIL

(N.T.S.)

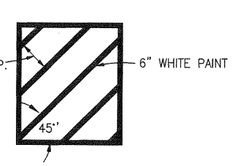

LOADING ZONE STRIPING DETAIL

(N.T.S.)

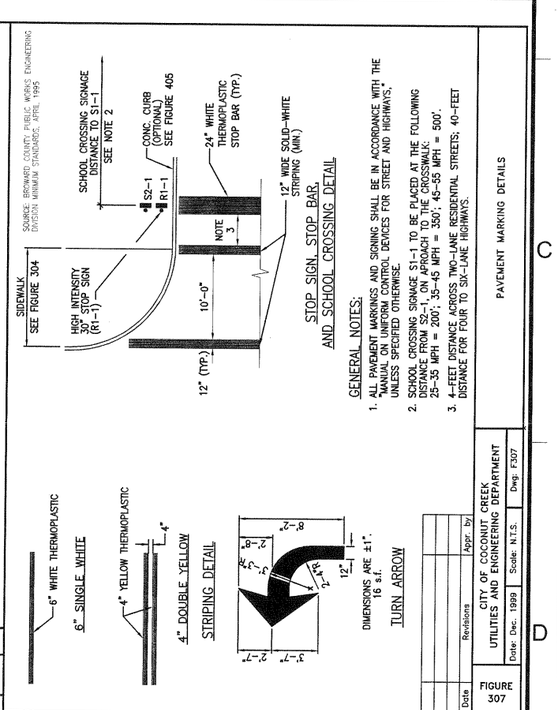

Date	Revisions	Appr. by	CITY OF COCONUT CREEK UTILITIES AND ENGINEERING DEPARTMENT			
			PAVEMENT MARKING DETAILS			
			Date: Dec. 1999	Scale: N.T.S.	Dwg: F307	FIGURE 307

Δ	Date	Description

EDSA
Michael Singer Inc.
FRIEDMUTTER GROUP
KEITH and SCHNARS, P.A.
ENGINEERS, PLANNERS, SURVEYORS
6500 N. ANDREWS AVENUE, FT. LAUDERDALE, FL 33309
TEL: 954-776-1616 CERT. OF AUTH. NO. 1337

STAMP
State of Florida
Professional Engineer
License No. 50588
TIM J. HALL, P.E.
NOV 29 2010

PROJECT NAME
PHASE I TRANSPORTATION CENTER
SEMINOLE COCONUT CREEK CASINO
SEMINOLE TRIBE OF FLORIDA
5600 NW 40TH STREET
COCONUT CREEK, FLORIDA 33073

DRAWN BY: KEITH AND SCHNARS, PA: B.F.
CHECKED BY: T.J.H.
ISSUE DATE: OCTOBER 18, 2010
JOB NUMBER: 17796.42
SHEET NAME: SITE PLAN DETAILS
SHEET NUMBER: C-24

Z:\PROJECTS\17796 STOF SERVICES CONTRACT\C6 GARAGE SITE PLAN AND PMDD REVS\CIVIL\CAD_PH1-GARAGE\17796.42_24_CDT1.DWG

11/23/2010 11:34 AM: Scale: 1:20; Layout Tab: C-24; Pen Table: KS-MONO.CTB; Plot Created by: FRANCINE LINZER;