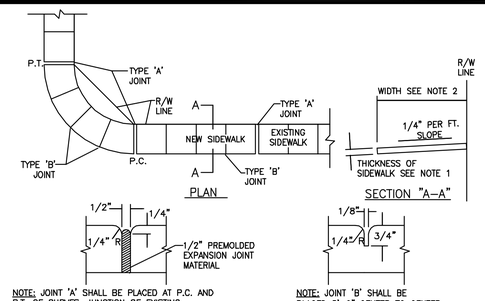

NOTE: JOINT 'A' SHALL BE PLACED AT P.C. AND P.T. OF CURVES, JUNCTION OF EXISTING SIDEWALKS, EVERY 50' ON NEW SIDEWALKS, AND WHERE SIDEWALK ABUTS CONCRETE CURBS, DRIVEWAYS, AND SIMILAR STRUCTURES.

TYPE 'A' JOINT

NOTE: JOINT 'B' SHALL BE PLACED 5'–0" CENTER TO CENTER ON SIDEWALK

TYPE 'B' JOINT

SIDEWALK JOINTS

NOTES

1) SIDEWALK THICKNESS IN RESIDENTIAL AREAS SHALL BE 4" THICK. THICKNESS IN COMMERCIAL AREAS AND IN DRIVEWAYS SHALL BE 6".
2) SIDEWALK WIDTHS SHALL BE 4' WIDE ON LOCAL STREETS AND 5' WIDE ON ALL OTHERS.

SIDEWALK DETAIL

N.T.S

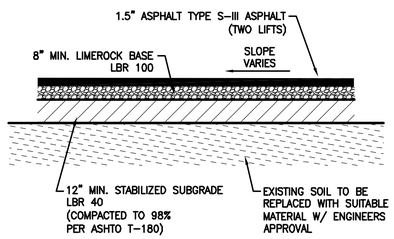

NOTE:
BASE AND SUBGRADE TO COMPLY WITH DENSITY TEST REQUIREMENT OF 98% COMPACTION OF MAXIMUM DENSITY PER AASHTO T–180

PAVEMENT SECTION

N.T.S.

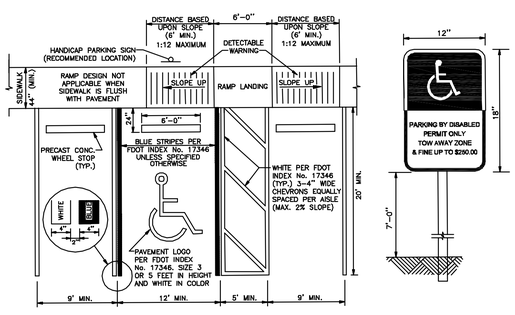

TYPICAL HANDICAP PARKING DETAIL

(N.T.S.)

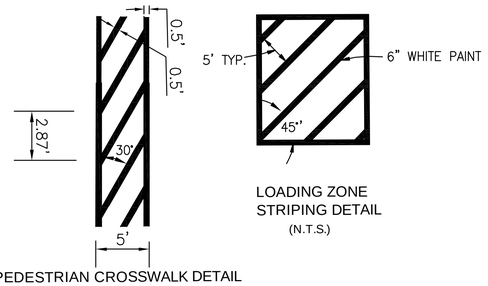

LOADING ZONE STRIPING DETAIL

(N.T.S.)

PEDESTRIAN CROSSWALK DETAIL

(N.T.S.)

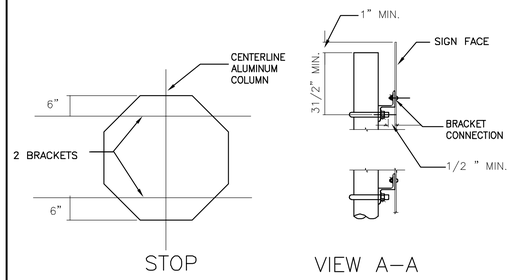

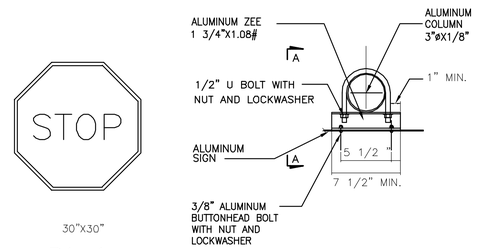

R1–1

TYPE I BRACKET

NOTES:
1. STOP SIGNS SHALL HAVE REFLECTIVE RED BACKGROUND AND WHITE LETTERING.
2. ALL SIGNS SHALL BE ACCORDING TO MUTCD. MANUAL OF UNIFORM TRAFFIC CONTROL DEVICES.

CITY OF COCONUT CREEK
UTILITIES AND ENGINEERING DEPARTMENT

STOP SIGN AND TYPICAL SIGN BRACKET DETAIL

Date	Revisions	Appr. by	Date: Feb. 2000	Scale: N.T.S.	Dwg: F313	Fig: 313

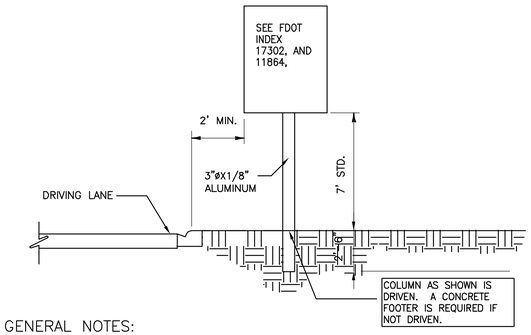

GENERAL NOTES:

1. The typical section shown here serves as a guide for locating the traffic signs required under various roadside conditions. For size and details of sign construction and footing, refer to the appropriate FDOTstandard index drawing for roadside sign.
2. It shall be the CONTRACTORS respon – sibility to verify the length of sign supports in the field prior to fabrication.
3. Roadside signs shall be installed at an angle of 1 to 4 degrees away from the traffic flow(see illustration). Shoulder mounted signs shall be rotated counterclockwise and median mounted signs rotated clockwise. Signs on curves shall be mounted as noted above from the perpendicular to the motorists line of sight.
4. The setback for stop and yield signs may be reduced to 3' minimum from the driving lane if required for visibility inbusiness or residential sections with no curb and speeds of 30 MPH or less.
5. The mounting heights are measured from the bottom of the sign panel to a horizontal line extended from the edge of the driving lane. If the standard heights cannot be met, the minimum heights are follows:

Expressway & Freeway Systems	7'
Other Roadway Systems	
Rural	5'
Urban (including residential with parking and/or pedestrian activity)	7'

If a secondary sign is mounted below the major sign,the major sign shall be at least 8' and the secondary sign at least 5' for expressway & freeway systems and for other systems the height to the secondary sign shall be at least 4' for rural and 6' for urban sections.

6. Sign supports should never be placed in ditches where erosion might affect the proper operation of the breakaway feature. It is also possible that a vehicle entering the ditch might be guided into the support.

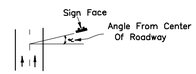

CITY OF COCONUT CREEK
UTILITIES AND ENGINEERING DEPARTMENT

TYPICAL ROADSIDE SIGN PLACEMENT DETAIL

Date	Revisions	Appr. by	Date: Feb. 2000	Scale: N.T.S.	Dwg: F313A	Fig: 313A

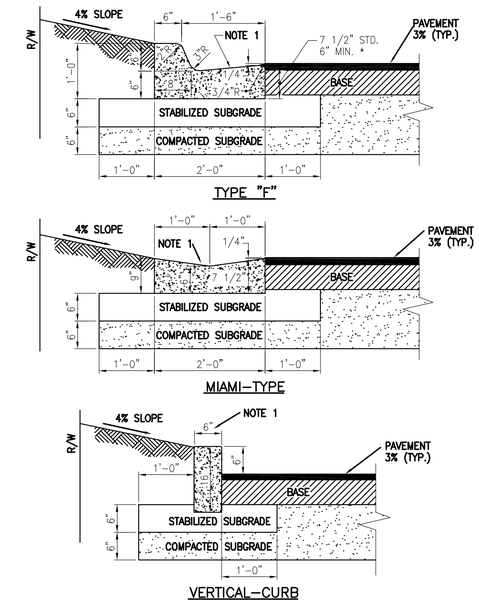

NOTE:
1. USE AN ALTERNATE ONLY PER ENGINEER DESIGN AND AND CITY APPROVAL; OR, AS CONTIGUOUS TO SPECIAL PAVERS.

CITY OF COCONUT CREEK
UTILITIES AND ENGINEERING DEPARTMENT

CURB AND GUTTER DETAILS

Date	Revisions	Appr. by	Date: Dec. 1999	Scale: N.T.S.	Dwg: F308	Fig: 308

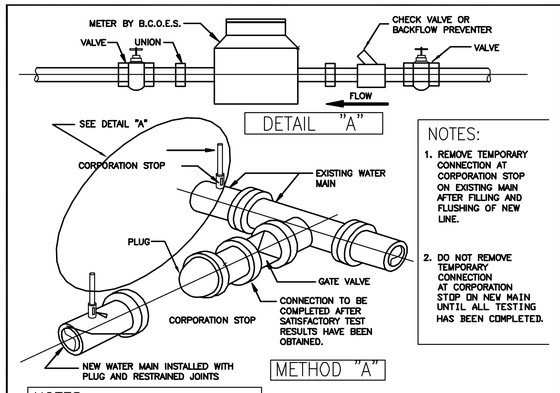

NOTES:
1. REMOVE TEMPORARY CONNECTION AT CORPORATION STOP ON EXISTING MAIN AFTER FILLING AND FLUSHING OF NEW LINE.
2. DO NOT REMOVE TEMPORARY CONNECTION AT CORPORATION STOP ON NEW MAIN UNTIL ALL TESTING HAS BEEN COMPLETED.

NOTES:
1. REMOVE TEMPORARY CONNECTION AT CORPORATION STOPS ON NEW MAIN AFTER FILING AND FLUSHING HAS BEEN COMPLETED.

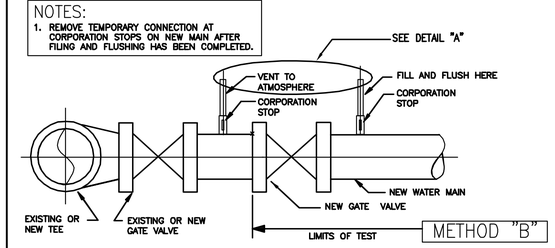

CITY OF COCONUT CREEK
UTILITIES AND ENGINEERING DEPARTMENT

FILLING AND FLUSHING DETAIL

Date	Revisions	Appr. by	Date: Nov. 1999	Scale: N.T.S.	Dwg: F104	Fig: 104

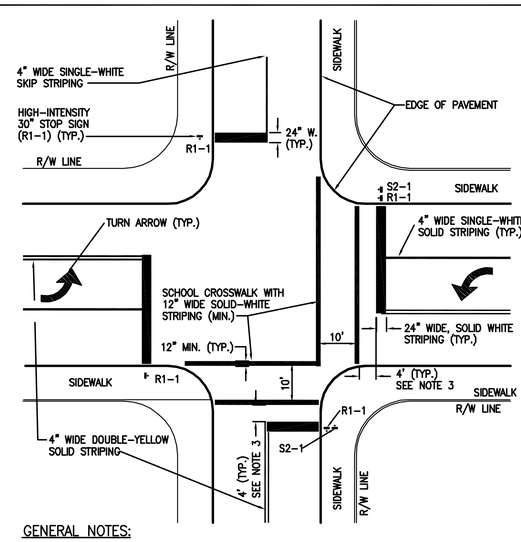

GENERAL NOTES:

1. ALL PAVEMENT MARKINGS AND SIGNING SHALL BE IN ACCORDANCE WITH THE "MANUAL ON UNIFORM TRAFFIC CONTROL DEVICES FOR STREET AND HIGHWAYS," UNLESS SPECIFIED OTHERWISE.
2. SEE FIGURE 307 FOR ADDITIONAL SIGNAGE, MARKING AND CROSSWALK DETAILS.
3. 4–FEET DISTANCE ACROSS TWO–LANE RESIDENTIAL STREETS; 40–FEET DISTANCE FOR FOUR TO SIX–LANE HIGHWAY.
4. DOUBLE–SIGNING SHALL BE INSTALLED BY WORK ORDER REQUEST.

SOURCE: BROWARD COUNTY PUBLIC WORKS ENGINEERING DIVISION MINIMUM STANDARDS, APRIL 1995

CITY OF COCONUT CREEK
UTILITIES AND ENGINEERING DEPARTMENT

PAVEMENT SIGNING AND MARKING DETAILS

Date	Revisions	Appr. by	Date: Dec. 1999	Scale: N.T.S.	Dwg: F306	Fig: 306

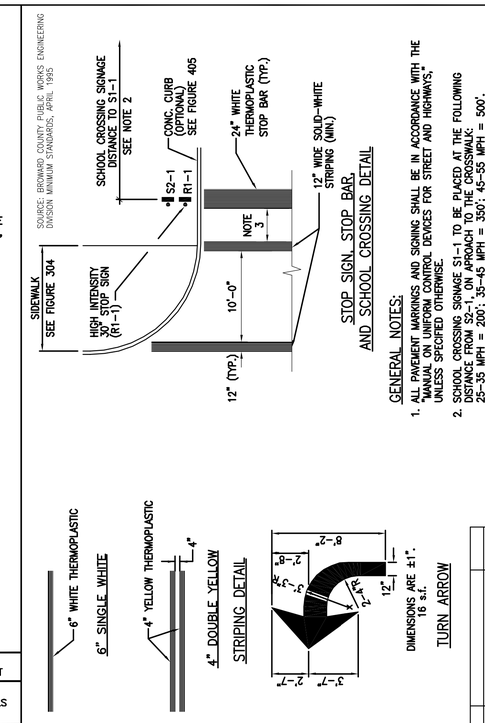

STOP SIGN, STOP BAR, AND SCHOOL CROSSING DETAIL

GENERAL NOTES:

1. ALL PAVEMENT MARKINGS AND SIGNING SHALL BE IN ACCORDANCE WITH THE "MANUAL ON UNIFORM CONTROL DEVICES FOR STREET AND HIGHWAYS," UNLESS SPECIFIED OTHERWISE.
2. SCHOOL CROSSING SIGNAGE S1–1 TO BE PLACED AT THE FOLLOWING DISTANCE FROM S2–1, ON APROACH TO THE CROSSWALK: 25–35 MPH = 200'; 35–45 MPH = 350'; 45–55 MPH = 500'.
3. 4–FEET DISTANCE ACROSS TWO–LANE RESIDENTIAL STREETS; 40–FEET DISTANCE FOR FOUR TO SIX–LANE HIGHWAYS.

PAVEMENT MARKING DETAILS

CITY OF COCONUT CREEK
UTILITIES AND ENGINEERING DEPARTMENT

Date	Revisions	Appr. by	Date: Dec. 1999	Scale: N.T.S.	Dwg: F307

FIGURE 307

Δ	Date	Description
	4/13/11	Issued for Administrative Approval

EDSA
PLANNING • LANDSCAPE ARCHITECTURE • URBAN DESIGN • GRAPHIC DESIGN
1012 SEBRING BOULEVARD, SUITE 110
FORT LAUDERDALE, FLORIDA 33301 USA
TEL: 954.524.3300

Michael Singer Inc.
South Studio - Delray Beach, FL
561.272.0344
mschwartzinger.com

FRIEDMUTTER GROUP
ARCHITECTURE • PLANNING • INTERIOR DESIGN
ARCHITECTURE: 2250 SW 3rd AVENUE, MIAMI, FL 33129 TEL: (305) 858-5501 FAX: (305) 858-1547
INTERIOR DESIGN: 2250 SW 3rd AVENUE, MIAMI, FL 33129 TEL: (305) 858-5501 FAX: (305) 858-1547
LANDSCAPE ARCHITECTURE: 2250 SW 3rd AVENUE, MIAMI, FL 33129 TEL: (305) 858-5501 FAX: (305) 858-1547
CIVIL ENGINEERS: KEITH AND SCHNARS, P.A. 2200 NW 38th AVENUE, LAUDERDALE LAKES, FL 33311 TEL: (954) 484-1000 FAX: (954) 484-1062
STRUCTURAL ENGINEERS: SILMAN 2200 SOUTH OCEAN BLVD., PALM BEACH, FL 33480 TEL: (561) 832-5553 FAX: (561) 832-1454
MECHANICAL ENGINEERS: ELLIOTT MECHANICAL SYSTEMS 2250 SW 3rd AVENUE, MIAMI, FL 33129 TEL: (305) 858-5501 FAX: (305) 858-1547
ELECTRICAL ENGINEERS: ELLIOTT MECHANICAL SYSTEMS 2250 SW 3rd AVENUE, MIAMI, FL 33129 TEL: (305) 858-5501 FAX: (305) 858-1547
PLUMBING ENGINEERS: ELLIOTT MECHANICAL SYSTEMS 2250 SW 3rd AVENUE, MIAMI, FL 33129 TEL: (305) 858-5501 FAX: (305) 858-1547

KEITH and SCHNARS, P.A.
ENGINEERS, PLANNERS, SURVEYORS
6500 N. ANDREWS AVENUE, FT. LAUDERDALE, FL 33309
TEL: 954-776-1616 CERT. OF AUTH. NO. 1037

STAMP
State of Florida
Professional Engineer
License No. 50588
TIM J. HALL, P.E.

PROJECT NAME
PHASE I TRANSPORTATION CENTER
SEMINOLE COCONUT CREEK CASINO
SEMINOLE TRIBE OF FLORIDA
5600 NW 40TH STREET
COCONUT CREEK, FLORIDA 33073

DRAWN BY: KEITH AND SCHNARS, PA
CHECKED BY: T.J.H.
ISSUE DATE: APRIL 13, 2011
JOB NUMBER: 17796.42
SHEET NAME: SITE PLAN DETAILS
SHEET NUMBER: C-24

7/6/2011 8:07 AM; Scale: 1:20; Layout Tab: C-24; Pen Table: KS–MONO.CTB; Plot Created by: FRANCINE LINZER;

Z:\PROJECTS\17796 STOF SERVICES CONTRACT\C6 GARAGE SITE PLAN and PMDD REVS\CIVIL\CAD\REVISED SITE PLAN\17796.42_SITE_24_CDT1.DWG