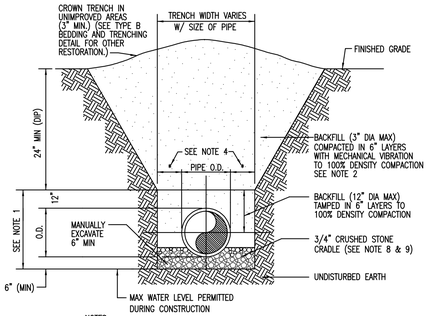

NOTES:
1. PIPE BEDDING: SELECT COMMON FILL COMPACTED TO 100% OF THE MAXIMUM DENSITY AS PER AASHTO T-99-C.
2. TRENCH BACKFILL: COMMON FILL COMPACTED TO 100% OF THE MAXIMUM DENSITY AS PER AASHTO T-99-C.
3. USE TYPE A BEDDING TO BE DETERMINED IN THE FIELD AS DIRECTED BY THE CITY OF COCONUT CREEK.
4. (*): 15" MAX. FOR PIPE DIAMETER LESS THAN 24", AND 24" MAX. FOR PIPE DIAMETER 24" AND LARGER.
5. WATER SHALL NOT BE PERMITTED IN THE TRENCH DURING CONSTRUCTION.
6. ALL PIPE TO BE INSTALLED WITH BELL FACING UPSTREAM TO THE DIRECTION OF THE FLOW.
7. REFER TO SECTION 2.18-E OF THE MANUAL FOR SHEETING AND BRACING IN EXCAVATIONS.
8. GRAVITY SEWERS SHALL UTILIZE TYPE A BEDDING, IF REQUIRED BY THE CITY. BEDDING DEPTH SHALL BE 6" MINIMUM FOR ANY DIAMETER PIPE.
9. DEPTH FOR REMOVAL OF UNSUITABLE MATERIAL SHALL GOVERN DEPTH OF BEDDING ROCK BELOW THE PIPE. APPLICABLE GOVERNING AGENCY SHALL DETERMINE IN THE FIELD REQUIRED REMOVAL OF UNSUITABLE MATERIAL TO REACH SUITABLE FOUNDATION.

Date	Revisions	Appr. by	CITY OF COCONUT CREEK UTILITIES AND ENGINEERING DEPARTMENT			
			TYPE A BEDDING AND TRENCHING DETAIL			
			Date: Nov. 1999	Scale: N.T.S.	Dwg: F020	Fig: 020

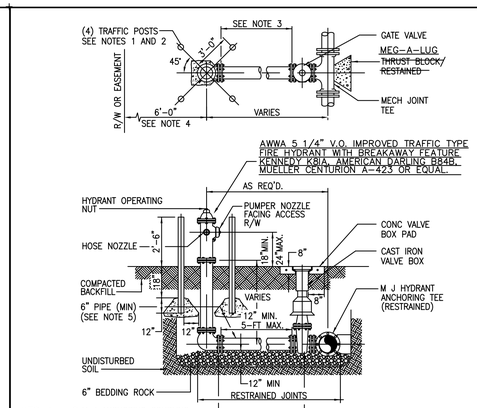

NOTES:
1. HYDRANT GUARDS TO BE 4" DIAMETER GALVANIZED STEEL PIPE FILLED WITH CONCRETE AND TO BE PLACED AT LOCATION AS REQUESTED BY THE CITY ENGINEER. GUARDS ARE REQUIRED AT ALL NON-RESIDENTIAL SITES.
2. OMIT REAR GUARDS IN LOCATION WHERE SIDEWALKS EXIST.
3. ~~USE MECHANICAL JOINT RESTRAINER GLAND CLOW MODEL NO. F1058 OR APPROVED EQUAL. MEG-A-LUG.~~
4. HYDRANT SETBACK SHALL BE SET TO A DISTANCE OF 7-FT MAXIMUM AND 4-FT MINIMUM FROM THE EDGE OF PAVEMENT OR CONFORM TO F.D.O.T. AND/OR BROWARD COUNTY REQUIREMENTS WHERE APPLICABLE.
5. SERVICE LINES FOR FIRE HYDRANTS TO BE SIZED TO ALLOW A MINIMUM OF 20 PSI RESIDUAL PRESSURE AT THE HYDRANT UNDER FIRE FLOW CONDITIONS.
6. TWO BLUE REFLECTIVE PAVEMENT MARKERS FOR IDENTIFICATION OF THE HYDRANT AND ITS VALVE LOCATION SHALL BE INSTALLED ON THE CENTER OF THE ADJACENT PAVED DRIVE LANE TO THE HYDRANT; MARKERS SHALL BE SPACED 1-FT APART, PERPENDICULAR TO THE ROAD CENTERLINE.

Date	Revisions	Appr. by	CITY OF COCONUT CREEK UTILITIES AND ENGINEERING DEPARTMENT			
			FIRE HYDRANT ASSEMBLY DETAIL			
April 2006	Added valve opening note		Date: Nov. 1999	Scale: N.T.S.	Dwg: F103	Fig: 103

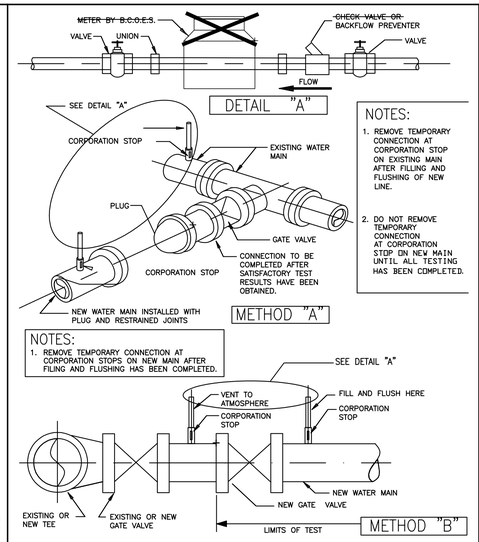

NOTES:
1. REMOVE TEMPORARY CONNECTION AT CORPORATION STOP ON EXISTING MAIN AFTER FILLING AND FLUSHING OF NEW LINE.
2. DO NOT REMOVE TEMPORARY CONNECTION AT CORPORATION STOP ON NEW MAIN UNTIL ALL TESTING HAS BEEN COMPLETED.

NOTES:
1. REMOVE TEMPORARY CONNECTION AT CORPORATION STOPS ON NEW MAIN AFTER FILING AND FLUSHING HAS BEEN COMPLETED.

Date	Revisions	Appr. by	CITY OF COCONUT CREEK UTILITIES AND ENGINEERING DEPARTMENT			
			FILLING AND FLUSHING DETAIL			
April 2006	Removed meter and check valve		Date: Nov. 1999	Scale: N.T.S.	Dwg: F104	Fig: 104

A CORPORATION STOP SHALL BE INSTALLED WITH A LENGTH OF COPPER TUBING EXTENDING ABOVE THE GROUND. THE TUBING SHALL BE INSTALLED WITH A 180° BEND AND A VALVE.

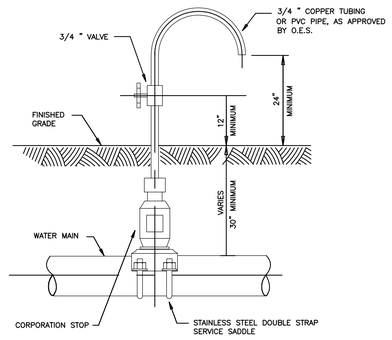

NOTES:
SAMPLING POINTS SHALL BE LOCATED AND LATER REMOVED AS REQUIRED BY BROWARD COUNTY HEALTH DEPARTMENT. CORPORATION STOP SHALL BE REMOVED AND SADDLE PLUGGED WITH A BRASS FITTING.

Date	Revisions	Appr. by	CITY OF COCONUT CREEK UTILITIES AND ENGINEERING DEPARTMENT			
			BACTERIOLOGICAL DETAIL			
			Date: Nov. 1999	Scale: N.T.S.	Dwg: F106	

Laying condition: Type 4 (Pipe bedded in sand, gravel, or crushed stone to the depth of 1/8 pipe diameter, 4 inches minimum. Backfill compacted to top of pipe).

Depth of cover: 2.5 feet

Working Pressure: 150 p.s.i.

Soil Bearing 2,000 p.s.f. against undisturbed soil.

PIPE DIA. (IN.)	11.25d (FT.)	22.5d (FT.)	45d (FT.)	90d (FT.)	DEAD END (FT.)	TEE (FT.)	45d VERT BEND (FT.)	22d VERT BEND (FT.)
6	5	9	16	31	60	35	20	12
8	6	11	20	42	80	50	25	14
10	7	14	24	52	100	60	26	18
12	8	16	28	63	120	65	30	20
14	10	18	32	73	130	80	35	23
16	11	20	35	84	140	90	40	26
18	12	22	39	94	150	100	45	28
20	13	24	42	105	180	120	55	32
24	14	27	49	126	220	150	65	35

Note that in actual installations, the restrained length will be in multiples of length of one piece of pipe (normally 18 to 20 feet). Thus, for example, if the restrained length for 6 inch pipe leading up to a 90 degree bend is 30 feet, two full lengths of restrained pipe will result in 36 to 40 feet of restraint, providing an additional safety factor. Where short connecting or closure pieces are needed to position fittings, they should, when possible, be placed outside the restrained section for maximum economy.

The above schedule is only a guideline.
The engineer of record must verify and revise calculations to meet installation requirements.

Date	Revisions	Appr. by	CITY OF COCONUT CREEK UTILITIES AND ENGINEERING DEPARTMENT			
			RESTRAINED PIPE JOINT SCHEDULE			
			Date: April 2006	Scale: N.T.S.	Dwg: F108A	Fig: 108A

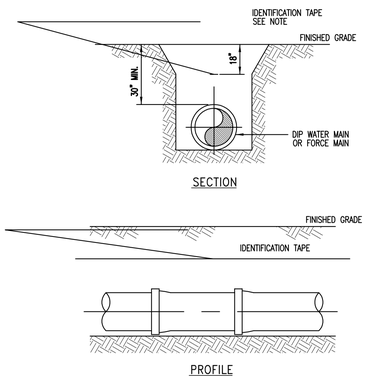

NOTE:
DETECTABLE IDENTIFICATION TAPE SHALL BE INSTALLED DIRECTLY OVER CENTERLINE OF THE PIPE AT 18-INCHES BELOW FINISHED GRADE.

Date	Revisions	Appr. by	CITY OF COCONUT CREEK UTILITIES AND ENGINEERING DEPARTMENT			
			LOCATING TAPE DETAIL			
			Date: Nov. 1999	Scale: N.T.S.	Dwg: F112	Fig: 112

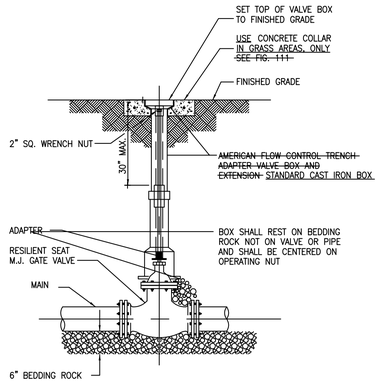

NOTES:
WHEN VALVE IS NOT LOCATED IN PAVEMENT, PLACE A WHITE PAVEMENT REFLECTOR MARKER IN THE DRIVE LANE, ADJACENT TO THE VALVE.

Date	Revisions	Appr. by	CITY OF COCONUT CREEK UTILITIES AND ENGINEERING DEPARTMENT			
			GATE VALVE AND BOX DETAIL			
April 2006	Adopted Cast Iron Box – Other		Date: Nov. 1999	Scale: N.T.S.	Dwg: F115	Fig: 115

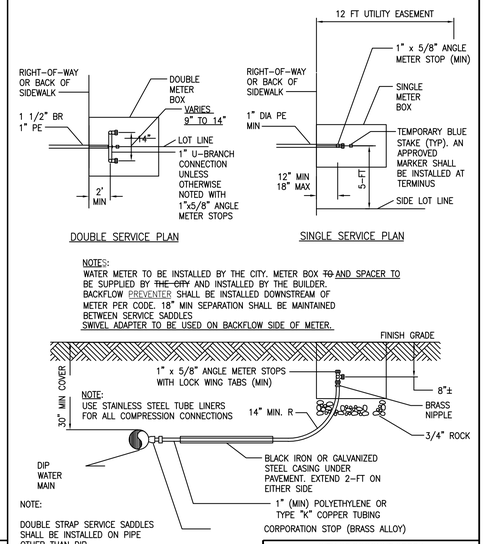

NOTE:
WATER METER TO BE INSTALLED BY THE CITY. METER BOX ~~TO~~ AND SPACER TO BE SUPPLIED BY ~~THE CITY~~ AND INSTALLED BY THE BUILDER. BACKFLOW PREVENTER SHALL BE INSTALLED DOWNSTREAM OF METER PER CODE. 18" MIN SEPARATION SHALL BE MAINTAINED BETWEEN SERVICE SADDLES
SWIVEL ADAPTER TO BE USED ON BACKFLOW SIDE OF METER.

NOTE:
USE STAINLESS STEEL TUBE LINERS FOR ALL COMPRESSION CONNECTIONS

NOTE:
DOUBLE STRAP SERVICE SADDLES SHALL BE INSTALLED ON PIPE OTHER THAN DIP

Date	Revisions	Appr. by	CITY OF COCONUT CREEK UTILITIES AND ENGINEERING DEPARTMENT			
			WATER SERVICE CONNECTION DETAILS			
April 2006	Modified notes regarding meter box		Date: Nov. 1999	Scale: N.T.S.	Dwg: F119	Fig: 119

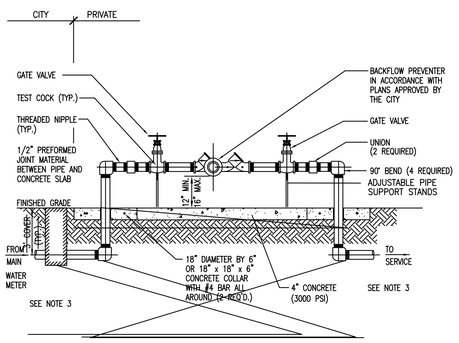

NOTES:
1. ALL PIPE AND FITTINGS 2" AND SMALLER SHALL BE THREADED BRASS, AS SHOWN. ALL 3" PIPE TO BE GALVANIZED STEEL.
2. ALL PIPE FITTINGS LARGER THAN 4" SHALL BE CEMENT-LINED DUCTILE IRON WITH FLANGED FITTINGS FOR ABOVEGROUND USE. MECHANICAL JOINT FITTINGS SHALL BE USED UNDERGROUND WITH RESTRAINED JOINTS AND THRUST COLLARS.
3. MEGALUGS, OR EQUAL, CAN BE USED IN PLACE OF RESTRAINED JOINTS ON ALL UNDERGROUND DUCTILE IRON PIPING (4" AND LARGER).
4. PAINT ALL ABOVEGROUND DUCTILE PIPING, FITTINGS AND VALVES.
5. BACKFLOW DEVICES MUST BE IN PLACE AND OPERATIONAL PRIOR TO THE INSTALLATION OF WATER METERS.

Date	Revisions	Appr. by	CITY OF COCONUT CREEK UTILITIES AND ENGINEERING DEPARTMENT			
			REDUCED PRESSURE BACKFLOW PREVENTER			
April 2006	Added note no. 5 – other		Date: Nov. 1999	Scale: N.T.S.	Dwg: F120	Fig: 120

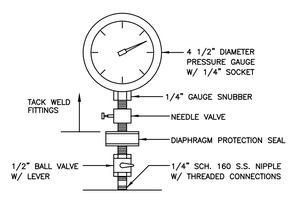

Date	Revisions	Appr. by	CITY OF COCONUT CREEK UTILITIES AND ENGINEERING DEPARTMENT			
			TYPICAL GAUGE CONNECTION			
			Date: April 2006	Scale: N.T.S.	Dwg: F141	Fig: 141

No.	REVISIONS	DATE	BY
3	ISSUED FOR PERMIT SUBMITTALS	7/28/2006	HLS
2	PER DRC COMMENTS	6/9/2006	HLS
1	PER DRC COMMENTS	5/24/2006	HLS

SCALE AS NOTED
DESIGNED BY EJW
DRAWN BY GB
CHECKED BY HLS

Kimley-Horn and Associates, Inc.
© 2006 KIMLEY-HORN AND ASSOCIATES, INC.
5200 NW 33RD AVENUE, SUITE 109, FT. LAUDERDALE, FL 33309
(954) 535-5100
CA 00000696

DATE 12/09/05
PROJECT NO. 042701051

COMMERCE BANK OUTPARCEL
EL DORADO HOME FURNISHINGS CENTER
COCONUT CREEK, FL
COCONUT CREEK, BROWARD COUNTY FLORIDA

DESIGN ENGINEER: HEATHER SPENCER, P.E.
FLORIDA REGISTRATION NUMBER: 59511
SEAL

UTILITY DETAILS #1

SHEET NUMBER C11

Drawing name: H:\042 jobs\042701___ Commerce Bank\042701051-Sawgrass Pky & Lyons Rd- (Coco Crk)\CADD\CIVIL\CIVIL2\CONST\C11-UTILITYDETAILS.dwg C11 Sep 20, 2006 1:15pm by: mario.rivera
This document, together with the concepts and designs presented herein, as an instrument of service, is intended only for the specific purpose and client for which it was prepared. Reuse of and improper reliance on this document without written authorization and adaptation by Kimley-Horn and Associates, Inc. shall be without liability to Kimley-Horn and Associates, Inc.