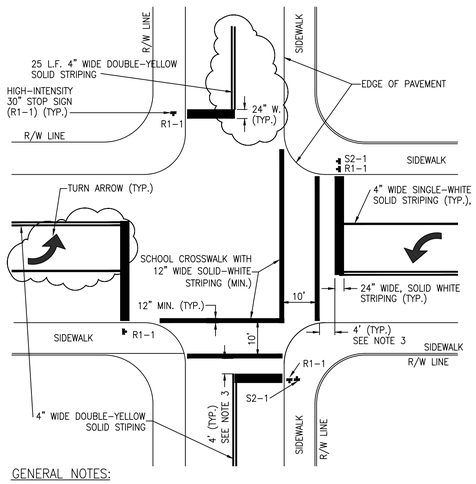

GENERAL NOTES:

1. ALL PAVEMENT MARKINGS AND SIGNING SHALL BE IN ACCORDANCE WITH THE "MANUAL ON UNIFORM TRAFFIC CONTROL DEVICES FOR STREET AND HIGHWAYS," UNLESS SPECIFIED OTHERWISE.
2. SEE FIGURE 307 FOR ADDITIONAL SIGNAGE, MARKING AND CROSSWALK DETAILS.
3. 4-FEET DISTANCE ACROSS TWO-LANE RESIDENTIAL STREETS; 40-FEET DISTANCE FOR FOUR TO SIX-LANE HIGHWAY.
4. DOUBLE-SIGNING SHALL BE INSTALLED BY WORK ORDER REQUEST.

SOURCE: BROWARD COUNTY PUBLIC WORKS ENGINEERING DIVISION MINIMUM STANDARDS, APRIL 1995

CITY OF COCONUT CREEK
UTILITIES AND ENGINEERING DEPARTMENT

PAVEMENT SIGNING AND MARKING DETAILS

Date	Revisions	Appr. by	Date: Dec. 1999	Scale: N.T.S.	Dwg: F306	Fig: 306

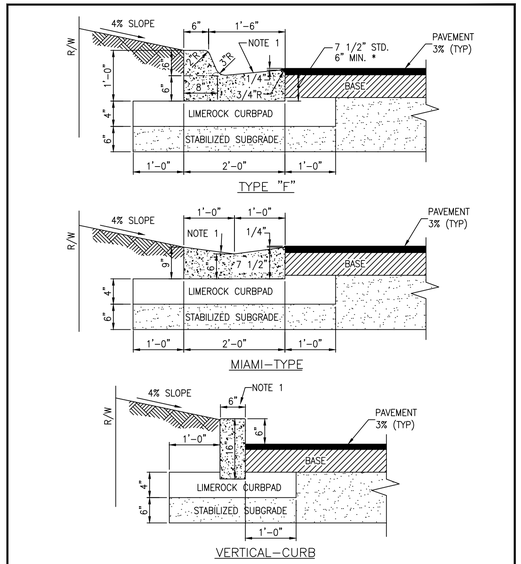

NOTE:

1. USE AN ALTERNATE ONLY PER ENGINEER DESIGN AND AND CITY APPROVAL; OR, AS CONTIGUOUS TO SPECIAL PAVERS.

CITY OF COCONUT CREEK
UTILITIES AND ENGINEERING DEPARTMENT

CURB AND GUTTER DETAILS

Date	Revisions	Appr. by	Date: Dec. 1999	Scale: N.T.S.	Dwg: F308	Fig: 308

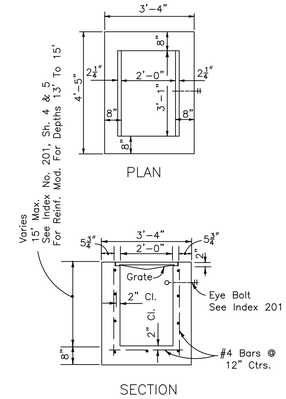

TYPE C

Recommended Maximum Pipe Size:
2'-0" Wall-18" Pipe
3'-1" Wall-24" Pipe

FDOT INDEX 232

CITY OF COCONUT CREEK
UTILITIES AND ENGINEERING DEPARTMENT

STORM INLET DETAIL
TYPE 'C'
1 OF 6

Date	Revisions	Appr. by	Date: Dec. 1999	Scale: N.T.S.	Dwg: F309A	Fig: 309A

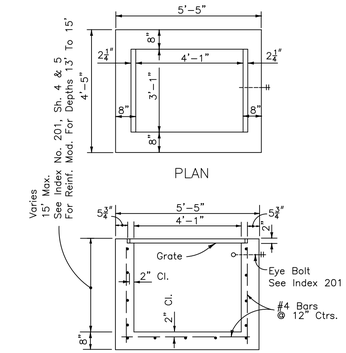

TYPE D

Recommended Maximum Pipe Size:
3'-1" Wall-24" Pipe
4'-1" Wall-36" Pipe

FDOT INDEX 232

CITY OF COCONUT CREEK
UTILITIES AND ENGINEERING DEPARTMENT

STORM INLET DETAIL
TYPE 'D'
2 OF 6

Date	Revisions	Appr. by	Date: Dec. 1999	Scale: N.T.S.	Dwg: F309B	Fig: 309B

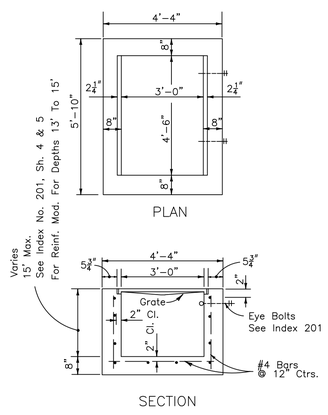

TYPE E

Recommended Maximum Pipe Size:
3'-0" Wall-24" Pipe
4'-6" Wall-42" Pipe

FDOT INDEX 232

CITY OF COCONUT CREEK
UTILITIES AND ENGINEERING DEPARTMENT

STORM INLET DETAIL
TYPE 'E'
3 OF 6

Date	Revisions	Appr. by	Date: Dec. 1999	Scale: N.T.S.	Dwg: F309C	Fig: 309C

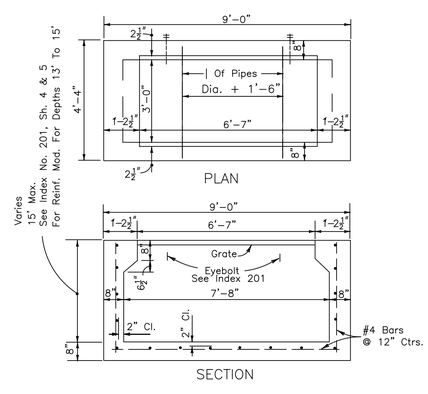

TYPE H

Recommended Maximum Pipe Size:
3'-0" Wall-24" Pipe
7'-8" Wall-1-66" Pipe
2-30" Pipe

FDOT INDEX 232

CITY OF COCONUT CREEK
UTILITIES AND ENGINEERING DEPARTMENT

STORM INLET DETAIL
TYPE 'H'
4 OF 6

Date	Revisions	Appr. by	Date: Dec. 1999	Scale: N.T.S.	Dwg: F3109D	Fig: 309D

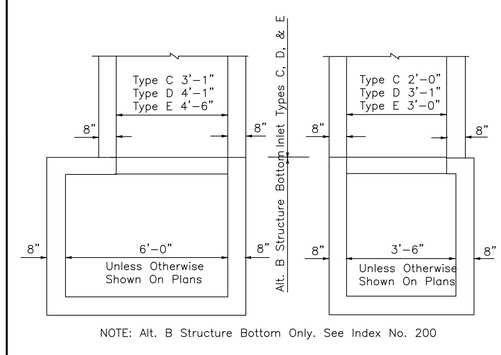

NOTE: Alt. B Structure Bottom Only. See Index No. 200

STRUCTURE BOTTOM FOR INLETS TYPE C, D & E

FDOT INDEX 232

CITY OF COCONUT CREEK
UTILITIES AND ENGINEERING DEPARTMENT

STORM INLET DETAIL
STRUCTURE BOTTOMS, TYPE 'C', 'D' & 'E'
5 OF 6

Date	Revisions	Appr. by	Date: Dec. 1999	Scale: N.T.S.	Dwg: F309E	Fig: 309E

GENERAL NOTES

1. These inlets are suitable for bicycle and pedestrian areas and are to be used in ditches, medians and other areas subject to infrequent traffic loadings but are not to be placed in areas subject to any heavy wheel loads.
2. Inlets subject to minimal debris should be constructed without slots. Where debris is a problem inlets should be constructed with slots. Slotted inlets located within roadway clear zones and in areas accessible to pedestrians shall have traversable slots. The traversable slot modification is not adaptable to inlet Type H. Slots may be constructed at either or both ends as shown on plans.
3. Steel grates are to be used on all inlets where bicycle traffic is anticipated. Steel grates are to be used on all inlets with traversable slots. Either cast iron or steel grates may be used on inlets without slots where bicycle traffic is not anticipated. Either cast iron or steel grates may be used on all inlets with non-traversable slots. Subject to the selection described above, when Alternate G grate is specified in the plans, either the steel grate, hot dipped galvanized after fabrication, or the cast iron grate may be used, unless the plans stipulate the particular type.
4. Recommended maximum pipe sizes shown are for concrete pipe. Pipe sizes larger than those recommended must be checked for fit.
5. All exposed corners and edges of concrete are to be chamfered .
6. Pavement to be used on inlets without slots and inlets with non-traversable slots only when called for in the plans; but required on all traversable slot inlets. Cost to be included in contract unit price for inlets. Quantities shown are for information only.
7. Traversable slots constructed in existing inlets shall be paid for as inlets partial, and shall include the cost for slot openings, paving and any required replacement grates.
8. Sodding to be used on all inlets not located in paved areas and paid for under contract unit price for Sodding SY.

FDOT INDEX 232

CITY OF COCONUT CREEK
UTILITIES AND ENGINEERING DEPARTMENT

STORM INLET DETAIL
GENERAL NOTES
6 OF 6

Date	Revisions	Appr. by	Date: Dec. 1999	Scale: N.T.S.	Dwg: F309F	Fig: 309F

NOTES:

1. ALL ELEVATIONS ARE IN N.A.V.D. 88

Sun-Tech Engineering, Inc.
Engineers - Planners - Surveyors
1600 West Oakland Park Boulevard
Ft. Lauderdale, FL 33311
www.suntecheng.com
Certificate of Auth. # 7097
Phone (954)777-3123
Fax (954)777-3114

REVISIONS

NO.	DATE:	DESCRIPTION

JOHNSON TECHNOLOGY PARK II
CITY OF COCONUT CREEK
FLORIDA
PAVING & DRAINAGE DETAILS

DATE: Nov. 2014
SCALE: N.T.S.
DESIGNED BY: M.G.
DRAWN BY: M.A.S.
JOB NUMBER 13-3581
SHEET No. C-1.6

SEAL
Clifford R. Loutan
Digitally signed by Clifford R. Loutan DN: cn=Clifford R. Loutan, o=Sun-Tech Engineering, Inc., ou=FL #6 Stamp, email=info@sun-tech-engineering.com, c=US Date: 2016.04.11 15:15:55 -04'00'
Apr 11 2016
CLIFFORD R. LOUTAN, P.E.
FL. REG. NO. 56890

FILE: K:\PROJECTS\13-xxx\13-3581\Dwg_3581ddts.dwg
PLOT DATE: 4/11/2016 2:48 PM BY: Miguel A. Sosa
LAYOUT: [C-1.6]

K:\PROJECTS\13-xxx\13-3581\Dwg_3581ddts.dwg, C-1.6, 4/11/2016 2:48:09 PM, 1:1, Sun-Tech Engineering, Inc. (MAS)