Swing Gate detail

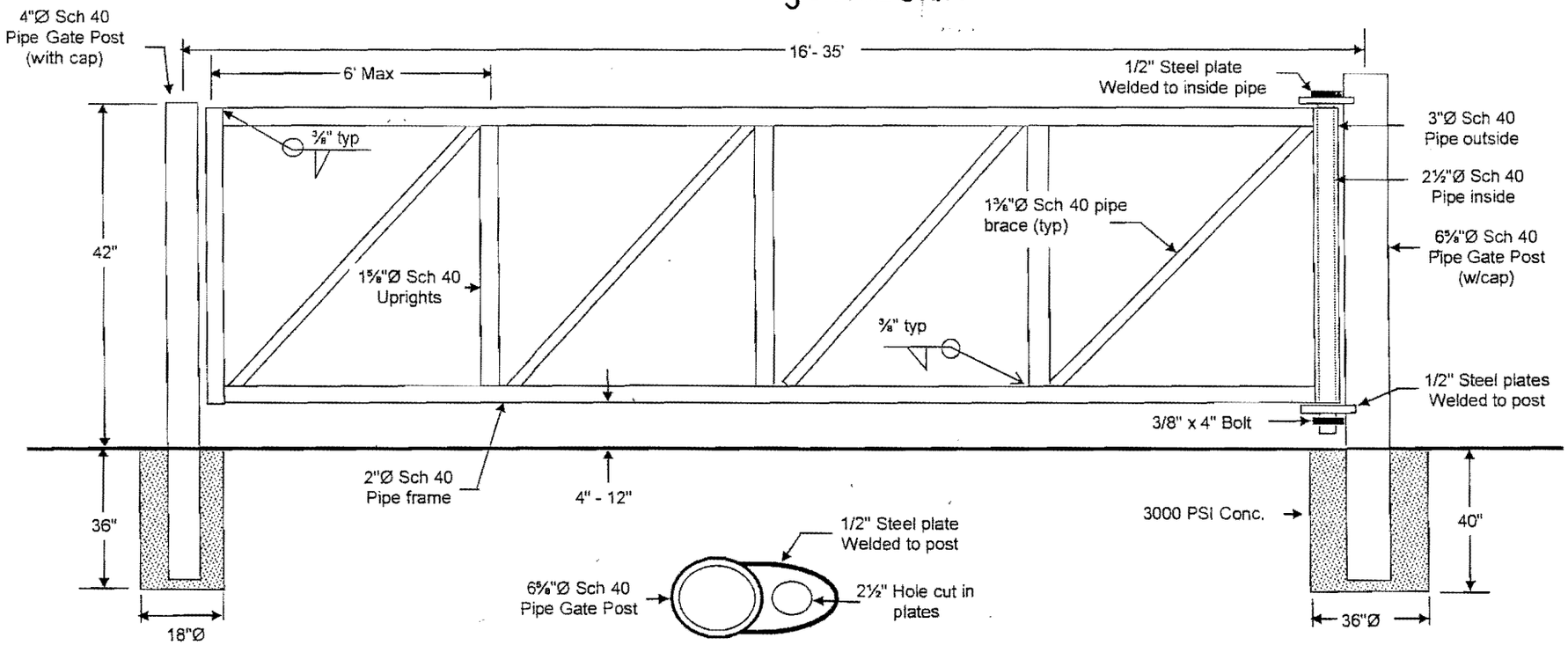

Hinge plate attachment detail

Notes:

1. Weld 2½"Ø inside hinge pipe to ½" plate.
2. All components shall be hot dipped galvanized.
3. Concrete footings shall be minimum of 18" diameter x 36" deep 3000 PSI Conc.
4. Materials: Sch 40 Galvanized Iron Pipe. Weld all joints min. ⅜" all around.
6. Apply zinc based coating to all welds.
7. Design: 2007 FBC, (2009 supplement), & ASCE 7-05, wind speed 75 MPH, exp. C.
8. No changes allowed without written authorization from the engineer.
9. Copies of this drawing without an original signature and seal of the engineer are invalid.

3/8/11

FLAHERTY ASSOCIATES INC.

William F. Flaherty, P.E. #25221
1351 SE 4th Avenue
Pompano Beach, FL 33060
Certificate of Authorization #26223

CD Stroud Inc. 3.1.11