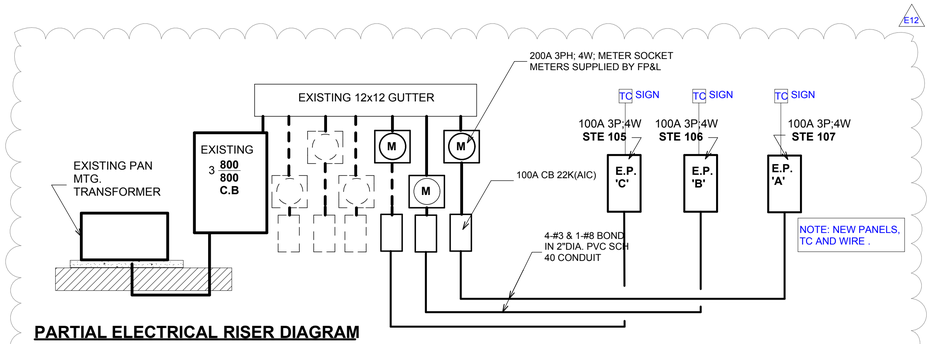

PARTIAL ELECTRICAL RISER DIAGRAM

NOT TO SCALE

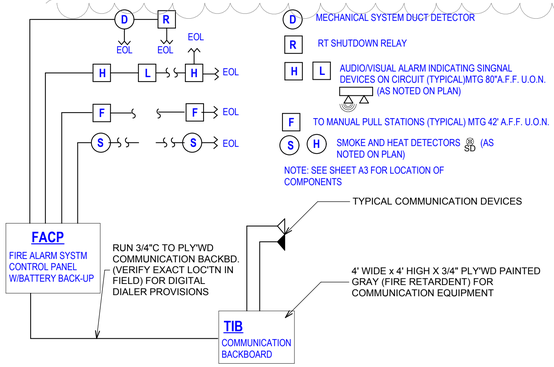

FIRE ALARM COMMUNICATION SYSTEM RISER DIAGRAM

NOT TO SCALE

FIRE ALARM SYSTEM REQUIREMENTS:

CONTRACTOR SHALL PROVIDE A COMPLETE AND OPERABLE FIRE ALARM SYSTEM AS SPECIFIED AND AS OTHERWISE REQUIRED BY CODE. COMPLETE FIRE ALARM SYSTEM SHALL BE INSTALLED IN ACCORDANCE WITH THE LATEST GOVERNING EDITIONS OF NFPA 72 AND 101 AND THE STANDARD BUILDING CODE. CONTRACTOR SHALL INCLUDE IN HIS BID ALL WORK NECESSARY TO PREPARE COMPLETE INSTALLATION DRAWINGS FOR REVIEW AND SUBMISSION TO THE LOCAL BUILDING OFFICIAL AS NEEDED FOR BUILDING PERMIT AS REQUIRED BY THE LOCAL AUTHORITIES HAVING JURISDICTION.

FIRE ALARM AUDIBLE ALARM SIGNAL SHALL PROVIDE A MINIMUM OF 70db THROUGHOUT BUILDING.CONTRACTOR SHALL MEASURE db LEVELS AT ALL EXTREME POINTS IN BUILDING WITH DOORS AND WINDOWS CLOSED AND SHALL ADD ADDITIONAL AUDIBLE (AND VISUAL) SIGNALS AT LOCATIONS NECESSARY FOR THE PROPER db LEVELS TO SATISFY THE AUTHOURITY HAVING JURISDICTION..

UPON ACTIVATION OF ANY SMOKE DETECTOR OR ANY A/C DUCT MOUNTED SMOKE DETECTOR ALL A/C SYSTEMS SHALL BE SHUT DOWN. FIRE ALAM CONTRACTOR SHALL PROVIE ALL REQUIRED RELAYS. COORDINATE WITH A/C CONTRACTOR PRIOR TO ROUGH IN.

ELECTRICAL LEGEND

SYMBOL	DESCRIPTION
	DUPLEX RECEPTACLE @ 12" A.F.F.
	DUPLEX RECEPT. UNDER COUNTER
	DUPLEX RECEPTACLE W/ GRD FAULT CIRCUIT INTERRUPTER
	DUPLEX RECEPT.WEATHERPROOF
	QUADPLEX RECEPTACLE
	DUPLEX RECEPTACLE TOP RECEPT. SWITCHED
	DED. SINGLE POLE APPLIANCE RECEPT 48" A.F.F.
	220 VOLT RECEPTACLE @ 12" A.F.F.
	GFI FLUSH FLOOR DUPLEX RECEPT.
$	SINGLE POLE SWITCH
3 $	THREE WAY SWITCH
4 $	FOUR WAY SWITCH
$	DIMMER SWITCH
	PUSH BUTTON
	UNDER CABINET MINI HALOGEN LIGHTS
	INCANDESCENT LIGHT - WALL MTD.
	FLUORESCENT LIGHT FIXTURE
	PULL CHAIN LIGHT 110 V RECEPT. COMBINATION IN ATTIC
	JUNCTION BOX
	TELEPHONE JACK
	RECESSED (HIGH HAT) LIGHT FIXTURE
	VAPOR PROOF LIGHT
	EYEBALL
TV	PRE WIRED CATV JACK
	SECURITY KEYPAD
	DIGITAL KEYPAD
	EX/LT COMBO NUTONE744NT 70CFM 75W LT.
	SMOKE ALARM - CEILING MOUNTED 110 V HARD WIRED W/ BATTERY BACKUP. ALL ARE NEW TO MEET CODE
	EXHAUST FAN
	EMERGENCY LIGHTS
	INTERCOM @ 60" A.F.F.
	VOLUME CONTROL
	SPEAKER IN CEILING
	COMBO EXIT/EMER. LT
	DISCONNECT SWITCH
	ELECTRICAL PANEL
	METER BY FLORIDA POWER & LIGHT
	THERMOSTAT
	GFI RECEPTICLE AT COUNTER HEIGHT
	DATA

ELECTRICAL NOTES:
ALL RECEPTICALS TO BE TAMPER PROOF

ALL PHONE DATA, COMPUTOR, HORN/STROB, DUCT DETECTORS, FIRE AND BURGLER ALARM SYSTEMS WITH LOW VOLTAGE LINES ARE TO BE UNDER SEPERATE PERMIT F.B.C. 105.2 EACH DISCIPLINE TO PROVIDE SINGLE LINE RISER DIAGRAMS AND LOCATION OF INSTALLATION WITH WIRING METHODS COMPLING WITH THE LATEST EDITION OF NEC.

ANY RECEPTICLES ON TENANT SEPARATION WALLS ARE TO BE SURFACE MOUNTED.

ELECTRICAL PANEL SCHEDULE 'A'

BUS KVA A	BUS KVA B	BUS KVA C	DESCRIPTION	WIRE	BR/PL	CONDUIT	#	#	DESCRIPTION	WIRE	BR/PL	CONDUIT	BUS KVA A	BUS KVA B	BUS KVA C
4.1			RTU-1	#8	60/3	1"	1	2	EXHAUST FANS/LTS	#12	20/1	1/2"	1.14		
	4.1						3	4	ELEC. WATER HEATER	#10	30/2	3/4"		4.5	
		4.1					5	6	LIGHTS (CR 3-YR)	#12	20/1	1/2"			0.9
0.9			RECEPTICLES (CR-3YR)	#12	20/1	1/2"	7	8	EXIT/SECURITY LTS	#12	20/1	1/2"	0.7		
	0.72		RECEPTICLES (LOBBY)	#12	20/1	1/2"	9	10	RECEPTICLES (CR-1YR)	#12	20/1	1/2"		0.72	
		0.66	LIGHTS (LOBBY)	#12	20/1	1/2"	11	12	LIGHTS (CORRIDOR)	#12	20/1	1/2"			1.00
0.18			ROOF SVC RECEPT(GFI)	#12	20/1	1/2"	13	14	SIGN ON TIME CLOCK	#12	20/1	1/2"	1.00		
	0.8		BUBBLER (GFI)	#12	20/1	1/2"	15	16	FIRE ALARM	#12	20/1	1/2"	0.69		
			EMPTY				17	18	EMPTY						
			EMPTY				19	20	EMPTY						
			EMPTY				21	22	EMPTY						
			EMPTY				23	24	EMPTY						
			EMPTY				25	26	EMPTY						
			EMPTY				27	28	EMPTY						
			EMPTY				29	30	EMPTY						
			EMPTY				31	32	EMPTY						
			EMPTY				33	34	EMPTY						
			EMPTY				35	36	EMPTY						
			EMPTY				37	38	EMPTY						
			EMPTY				39	40	EMPTY						
			EMPTY				41	42	EMPTY						
5.18	5.62	4.76	TOTAL: KVA									TOTAL: KVA	3.53	5.22	1.90

TOTAL BUS KVA:
A:SUM= 8.71 KVA
B:SUM= 10.84 KVA
C:SUM= 6.66 KVA
TOTAL CONNECT KVA:= 72.81 AMPS

LOAD CALCULATIONS:
LARGEST A/C x 1.25% = 15.375 KVA
OTHER LOAD x 100%= 13.91 KVA
TOT. COMPUTED LOAD: 81.35 AMPS

RATED VOLTAGE:	120/208V, 3PH,4W	LOCATION:	SUITE 107
RATED AMPS:	100 AMPS	MOUNTING:	SURFACE
MAIN:	100 AMPS	FEEDER CONNECTORS:	SEE RISER DIAGRAM
BRANCH POLES:	42 CIRCUITS	FEEDER CONDUIT:	SEE RISER DIAGRAM
INTERRUPTING RATE:	22K A.I.C.	MANUF. CAT.#	SQUARE 'D'

ELECTRICAL PANEL SCHEDULE 'B'

BUS KVA A	BUS KVA B	BUS KVA C	DESCRIPTION	WIRE	BR/PL	CONDUIT	#	#	DESCRIPTION	WIRE	BR/PL	CONDUIT	BUS KVA A	BUS KVA B	BUS KVA C
3.9			RTU-2	#8	60/3	1"	1	2	LIGHTS (CR-2YR)	#12	20/1	1/2"	1.3		
	3.9						3	4	LIGHTS (KIT/REST.RM)	#12	20/1	1/2"		0.22	
		3.9					5	6	KITCHEN CKT (GFI)	#12	20/1	1/2"			1.5
1.5			KITCHEN CKT (GFI)	#12	20/1	1/2"	7	8	DRINKING FOUNTAIN	#12	20/1	1/2"	0.8		
	1.2		REFRIGERATOR	#12	20/1	1/2"	9	10	EMER/SECURITY LTS	#12	20/1	1/2"		0.5	
		0.9	RECEPTICALS (CR-2YR)	#12	20/1	1/2"	11	12	ROOF SVC RECEPT.	#12	20/1	1/2"			0.18
1.00			SIGN ON TIME CLOCK	#12	20/1	1/2"	13	14	SECURITY CAMERA	#12	20/1	1/2"	0.72		
			EMPTY				15	16	EMPTY						
			EMPTY				17	18	EMPTY						
			EMPTY				19	20	EMPTY						
			EMPTY				21	22	EMPTY						
			EMPTY				23	24	EMPTY						
			EMPTY				25	26	EMPTY						
			EMPTY				27	28	EMPTY						
			EMPTY				29	30	EMPTY						
			EMPTY				31	32	EMPTY						
			EMPTY				33	34	EMPTY						
			EMPTY				35	36	EMPTY						
			EMPTY				37	38	EMPTY						
			EMPTY				39	40	EMPTY						
			EMPTY				41	42	EMPTY						
6.4	5.1	4.8	TOTAL: KVA									TOTAL: KVA	2.82	0.72	1.68

TOTAL BUS KVA:
A:SUM= 9.22 KVA
B:SUM= 5.82 KVA
C:SUM= 6.48 KVA
TOTAL CONNECT KVA:= 59.78 AMPS

LOAD CALCULATIONS:
LARGEST A/C x 1.25% = 14.625 KVA
OTHER LOAD x 100%= 9.82 KVA
TOT. COMPUTED LOAD: 67.90 AMPS

RATED VOLTAGE:	120/208V, 3PH,4W	LOCATION:	SUITE 106
RATED AMPS:	100 AMPS	MOUNTING:	SURFACE
MAIN:	100 AMPS	FEEDER CONNECTORS:	SEE RISER DIAGRAM
BRANCH POLES:	42 CIRCUITS	FEEDER CONDUIT:	SEE RISER DIAGRAM
INTERRUPTING RATE:	22K A.I.C.	MANUF. CAT.#	SQUARE 'D'

ELECTRICAL PANEL SCHEDULE 'C'

BUS KVA A	BUS KVA B	BUS KVA C	DESCRIPTION	WIRE	BR/PL	CONDUIT	#	#	DESCRIPTION	WIRE	BR/PL	CONDUIT	BUS KVA A	BUS KVA B	BUS KVA C
3.9			RTU-1	#8	60/3	1"	1	2	LIGHTS (CR 4-YR)	#12	20/1	1/2"	1.06		
	3.9						3	4	RECEPTICLES (CR-4YR)	#10	30/2	1/2"		0.72	
		3.9					5	6	LIGHTS (CR 3-YR)	#12	20/1	1/2"			1.02
0.54			RECEPTICLES (CR-3YR)	#12	20/1	1/2"	7	8	SIGN ON TIME CLOCK	#12	20/1	1/2"	1.00		
	0.18		ROOF SVC RECEPT(GFI)	#12	20/1	1/2"	9	10	EMERGENCY/LTS	#12	20/1	1/2"		0.50	
			EMPTY				11	12	EMPTY						
			EMPTY				13	14	EMPTY						
			EMPTY				15	16	EMPTY						
			EMPTY				17	18	EMPTY						
			EMPTY				19	20	EMPTY						
			EMPTY				21	22	EMPTY						
			EMPTY				23	24	EMPTY						
			EMPTY				25	26	EMPTY						
			EMPTY				27	28	EMPTY						
			EMPTY				29	30	EMPTY						
			EMPTY				31	32	EMPTY						
			EMPTY				33	34	EMPTY						
			EMPTY				35	36	EMPTY						
			EMPTY				37	38	EMPTY						
			EMPTY				39	40	EMPTY						
			EMPTY				41	42	EMPTY						
4.44	4.08	3.9	TOTAL: KVA									TOTAL: KVA	2.06	1.22	1.02

TOTAL BUS KVA:
A:SUM= 6.5 KVA
B:SUM= 5.3 KVA
C:SUM= 4.92 KVA
TOTAL CONNECT KVA:= 46.44 AMPS

LOAD CALCULATIONS:
LARGEST A/C x 1.25% = 14.625 KVA
OTHER LOAD x 100%= 5.02 KVA
TOT. COMPUTED LOAD: 54.57 AMPS

RATED VOLTAGE:	120/208V, 3PH,4W	LOCATION:	SUITE 105
RATED AMPS:	100 AMPS	MOUNTING:	SURFACE
MAIN:	100 AMPS	FEEDER CONNECTORS:	SEE RISER DIAGRAM
BRANCH POLES:	42 CIRCUITS	FEEDER CONDUIT:	SEE RISER DIAGRAM
INTERRUPTING RATE:	22K A.I.C.	MANUF. CAT.#	SQUARE 'D'

ROBERT F. SONBERG ARCHITECT
113 BENT TREE DRIVE
PALM BEACH GARDENS, FL 33418
PHONE: (561)691-9277
CELL: (561)460-5635

COPYRIGHT
MATERIAL SHOWN HEREIN IS THE COPYRIGHTED PROPERTY OF ROBERT F. SONBERG ARCHITECT AND AS SUCH SHALL NOT BE REPRODUCED IN WHOLE OR IN PART WITHOUT THE WRITTEN PERMISSION OF SAID ARCHITECT.

NO. 6280

PROVIDENCE CHILDREN'S ACADEMY

6111 LYONS ROAD
STE.
105, 106 & 107
COCONUT CREEK,
FLORIDA 33073

TOM & DONNA MORGAN

REVISIONS

MARK	DATE	DESCRIPTION
	/ /	

PROJECT NO:	09-303
ISSUED DATE:	10/21/09
DRAWN BY:	RFS
CHK'D BY:	RFS

SHEET TITLE
ELECTRICAL DATA

E-3

SHEET 13 OF 14

C:\Users\Bob\Archicad 12 Projects\09-303 Providence Children's Academy\09-303 Providence Children's Academy1-ADA ALT.pln