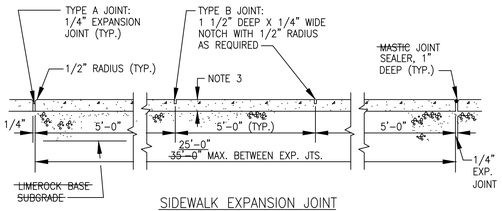

SIDEWALK EXPANSION JOINT
LONGITUDINAL SECTION

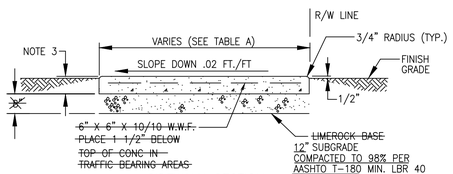

SIDEWALK SECTION

TABLE A – SIDEWALK WIDTH	
WIDTH	ROADWAY APPLICATION
5'	LOCAL STREET ACCESSES
5'	TWO-LANE COLLECTOR
5'	FOUR-LANE COLLECTOR
5'	ARTERIAL ROADWAYS

SIDEWALK JOINTS	
TYPE	LOCATION
"A"	P.C. P.T. OF CURVES
"B"	5'-0" CENTER TO CENTER ON SIDEWALKS

NOTES:

1. CONCRETE TO BE TYPE I ~~2500~~ 3000 P.S.I.
2. USE OF REINFORCED CEMENT IS PROHIBITED
3. 4" THK. MIN. (TYP.); 6" THK. AT DRIVEWAYS, EXTENDED TWO-FEET BEYOND DRIVE, ON BOTH SIDES.
4. SIDEWALK SLOPES SHALL MEET THE REQUIREMENTS OF THE AMERICAN WITH DISABILITIES ACT.
5. CONSTRUCT EXPANSION JOINTS AT SPACINGS SHOWN ABOVE; AT POINT OF CURVATURE; AT ADJOINING STRUCTURES; AND, AT THE END OF DAYS WORK.

Date	Revisions	Appr. by

CITY OF COCONUT CREEK
UTILITIES AND ENGINEERING DEPARTMENT

TYPICAL SIDEWALK DETAILS

Date: Dec. 1999 | Scale: N.T.S. | Dwg: F304 | Fig: 304

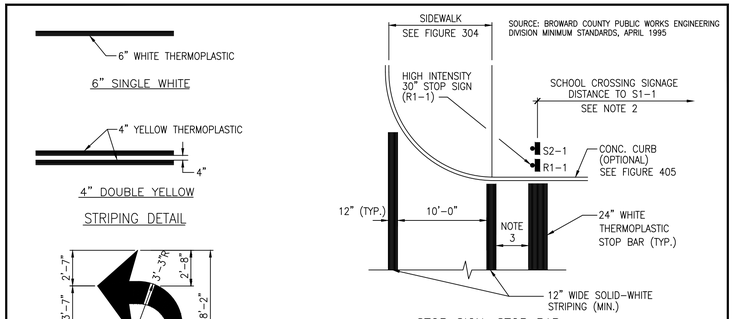

STOP SIGN, STOP BAR,
AND SCHOOL CROSSING DETAIL

GENERAL NOTES:

1. ALL PAVEMENT MARKINGS AND SIGNING SHALL BE IN ACCORDANCE WITH THE "MANUAL ON UNIFORM CONTROL DEVICES FOR STREET AND HIGHWAYS," UNLESS SPECIFIED OTHERWISE.
2. SCHOOL CROSSING SIGNAGE S1-1 TO BE PLACED AT THE FOLLOWING DISTANCE FROM S2-1, ON APROACH TO THE CROSSWALK: 25-35 MPH = 200'; 35-45 MPH = 350'; 45-55 MPH = 500'.
3. 4-FEET DISTANCE ACROSS TWO-LANE RESIDENTIAL STREETS; 40-FEET DISTANCE FOR FOUR TO SIX-LANE HIGHWAYS.

Date	Revisions	Appr. by

FIGURE 307

CITY OF COCONUT CREEK
UTILITIES AND ENGINEERING DEPARTMENT

Date: Dec. 1999 | Scale: N.T.S. | Dwg: F307

PAVEMENT MARKING DETAILS

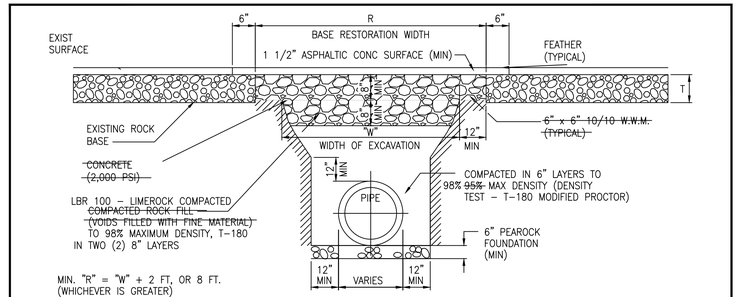

GENERAL NOTES

1. BASE AND BACKFILL MATERIALS SHALL BE EITHER OF THE SAME TYPE AND COMPOSITION AS THE MATERIALS REMOVED, OR OF EQUAL OR GREATER STRUCTURAL ADEQUACY. MATERIALS CONTAMINATED WITH DELETERIOUS SUBSTANCES DURING EXCAVATION SHALL NOT BE USED.
2. BASE MATERIAL SHALL BE PLACED IN TWO OR THREE LAYERS AND EACH LAYER THOROUGHLY ROLLED OR TAMPED TO THE SPECIFIED DENSITY.
3. ASPHALT CONCRETE PAVEMENT JOINTS SHALL BE MECHANICALLY SAWED.
4. SURFACE TREATED PAVEMENT JOINTS SHALL BE LAPPED AND FEATHERED.
5. SURFACE MATERIAL WILL BE CONSISTENT WITH THE EXISTING SURFACE.
6. PLACE PRIME COAT ON COMPACTED BASE AND TACK ON EXISTING ASPHALT CONCRETE SURFACES AND EDGES.
7. COMPACTION TESTS SHALL BE TAKEN AS DIRECTED BY THE CITY ENGINEER AND PAID FOR BY THE PERMITTEE. A MINIMUM OF ONE PER CROSSING OR ONE PER 100-FT PARALLEL CONSTRUCTION WILL BE REQUIRED.

Date	Revisions	Appr. by
April 2006	Modified section	

FIGURE 302

CITY OF COCONUT CREEK
UTILITIES AND ENGINEERING DEPARTMENT

Date: Dec. 1999 | Scale: N.T.S. | Dwg: F302

RESTORATION OF FLEXIBLE PAVEMENT – CROSSINGS

NOTES:

1. BASE MATERIAL SHALL HAVE A MINIMUM LBR OF 100 AND A MINIMUM CARBONATE CONTENT OF 70% (60% FOR LOCAL STREETS).
2. BASE SHALL BE PLACED IN 6" MAXIMUM THICKNESS LAYERS WITH EACH LAYER COMPACTED AS REQUIRED AND TESTED PRIOR TO THE PLACEMENT OF THE SUCCEEDING LAYERS.
3. SUBGRADE MATERIAL SHALL BE GRANULAR AND ANGULAR, AND SHALL HAVE A MINIMUM LBR OF 40.
4. BACKFILL SHALL BE PLACED AND COMPACTED IN 8" LAYERS, BUT TESTING WILL BEGIN 12" ABOVE THE INSTALLED FACILITY. PRIOR TO THE PLACEMENT OF THE SUCCEEDING LAYERS.
5. ALL EDGES OF EXISTING ASPHALT PAVEMENT WHERE RESURFACING WILL ABUT, SHALL BE SAW CUT IN STRAIGHT LINES PARALLEL TO OR PERPENDICULAR TO ROADWAY, PRIOR TO THE RESURFACING.
6. RESURACING MATERIAL SHALL BE CONSISTENT WITH SURROUNDING SURFACE AND SHALL BE APPLIED A MIN. OF 1" AND A MAX. OF 2" IN THICKNESS.

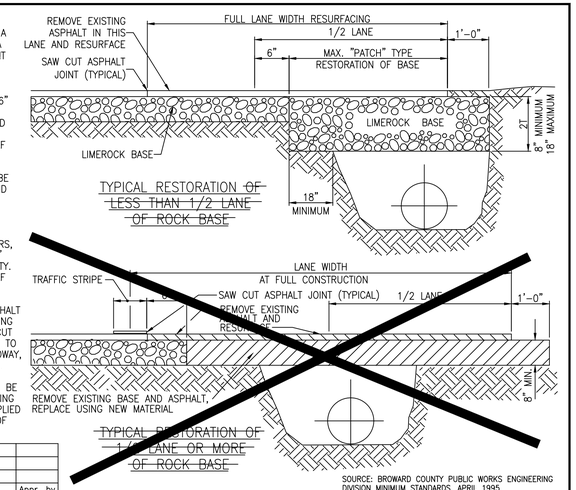

SOURCE: BROWARD COUNTY PUBLIC WORKS ENGINEERING DIVISION MINIMUM STANDARDS, APRIL 1995

Date	Revisions	Appr. by
04/17/06	Deleted non applicable sections	

FIGURE 303

CITY OF COCONUT CREEK
UTILITIES AND ENGINEERING DEPARTMENT

Date: Dec. 1999 | Scale: N.T.S. | Dwg: F303

RESTORATION OF FLEXIBLE PAVEMENT
LONGITUDINAL AND TRANSVERSE CUTS

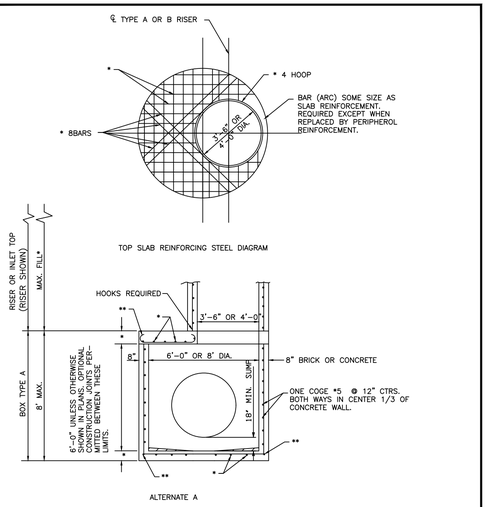

* SEE F.D.O.T. INDEX 200 FOR SLAB REINFORCEMENT
** PERIPHERAL BARS OR STRAIGHT END EMBEDMENTS MAY BE USED IN LIEU OF STANDARD HOOKS. IN ACCORDANCE WITH DETAILS INDEX No. 201. Sh. 3 of 5. REFER TO F.D.O.T. INDEX No. 200

TYPE "J"
STRUCTURE

Date	Revisions	Appr. by

CITY OF COCONUT CREEK
UTILITIES AND ENGINEERING DEPARTMENT

TYPE "J" STRUCTURE

Date: April 2006 | Scale: N.T.S. | Dwg: F384 | Fig: 384

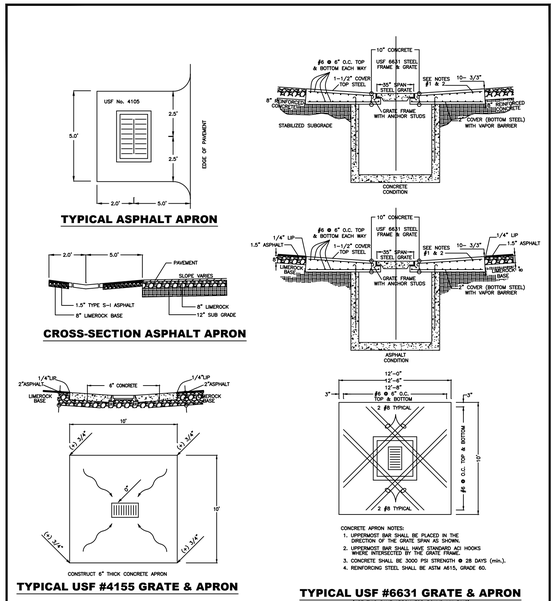

CONCRETE APRON NOTES:

1. UPPERMOST BAR SHALL BE PLACED IN THE DIRECTION OF THE GRATE SPAN AS SHOWN.
2. UPPERMOST BAR SHALL HAVE STANDARD ACI HOOKS WHERE INTERSECTED BY THE GRATE FRAME.
3. CONCRETE SHALL BE 3000 PSI STRENGTH @ 28 DAYS (min.).
4. REINFORCING STEEL SHALL BE ASTM A615, GRADE 60.

Date	Revisions	Appr. by

CITY OF COCONUT CREEK
UTILITIES AND ENGINEERING DEPARTMENT

TYPICAL APRON DETAILS

Date: April 2006 | Scale: N.T.S. | Dwg: F387 | Fig: 387

FILE: K:\PROJECTS\15-xxx\15-3715\dwg\3715ddt.dwg
PLOT DATE: 1/20/2016 4:18 PM BY: Andy Vennemon
LAYOUT: [C-2.9]

K:\PROJECTS\15-xxx\15-3715\dwg\3715ddt.dwg, C-2.9, 1/20/2016 4:18:42 PM, 1:1, Sun-Tech Engineering, Inc. (AEV), Sun-Tech Engineering, Inc. (AEV)

Sun-Tech Engineering, Inc.
Engineers - Planners - Surveyors
Certificate of Auth. # 7097
Phone (954)777-3123
Fax (954)777-3114
1600 West Oakland Park Boulevard
Ft. Lauderdale, FL 33311
www.suntechengi.com

REVISIONS

NO.	DATE:	DESCRIPTION

MIDTOWN RESIDENCES @ COCONUT CREEK
COCONUT CREEK FLORIDA
PAVING, GRADING & DRAINAGE DETAILS

DATE: Jul. 2015
SCALE: N.T.S.
DESIGNED BY: C.R.L.
DRAWN BY: A.E.V.
JOB NUMBER 15-3715
SHEET No. C-2.9

SEAL
Clifford R. Loutan
Jan 20 2016
CLIFFORD R. LOUTAN, P.E.
FL. REG. NO. 56890