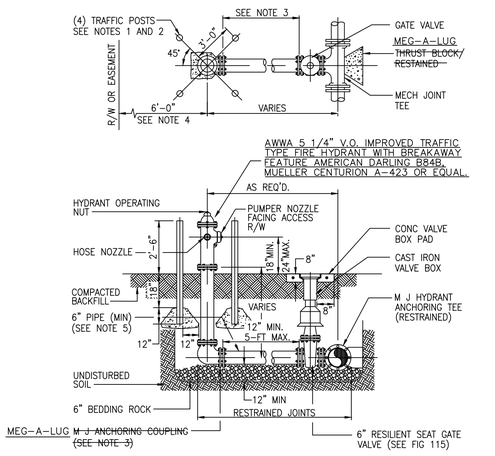

NOTES:
1. HYDRANT GUARDS TO BE 4" DIAMETER GALVANIZED STEEL PIPE FILLED WITH CONCRETE AND TO BE PLACED AT LOCATION AS REQUESTED BY THE CITY ENGINEER. GUARDS ARE REQUIRED AT ALL NON-RESIDENTIAL SITES.
2. OMIT REAR GUARDS IN LOCATION WHERE SIDEWALKS EXIST.
3. ~~USE MECHANICAL JOINT RESTRAINER GLAND CLOW MODEL NO. F1058 OR APPROVED EQUAL~~ MEG-A-LUG
4. HYDRANT SETBACK SHALL BE SET TO A DISTANCE OF 7-FT MAXIMUM AND 4-FT MINIMUM FROM THE EDGE OF PAVEMENT OR CONFORM TO F.D.O.T. AND/OR BROWARD COUNTY REQUIREMENTS WHERE APPLICABLE.
5. SERVICE LINES FOR FIRE HYDRANTS TO BE SIZED TO ALLOW A MINIMUM OF 20 PSI RESIDUAL PRESSURE AT THE HYDRANT UNDER FIRE FLOW CONDITIONS.
6. TWO BLUE REFLECTIVE PAVEMENT MARKERS FOR IDENTIFICATION OF THE HYDRANT AND ITS VALVE LOCATION SHALL BE INSTALLED ON THE CENTER OF THE ADJACENT PAVED DRIVE LANE TO THE HYDRANT; MARKERS SHALL BE SPACED 1-FT APART, PERPENDICULAR TO THE ROAD CENTERLINE.

Date	Revisions	Appr. by
April 2006	Added valve opening note	

CITY OF COCONUT CREEK
UTILITIES AND ENGINEERING DEPARTMENT

FIRE HYDRANT ASSEMBLY DETAIL

Date: Nov. 1999 | Scale: N.T.S. | Dwg: F103 | Fig: 103

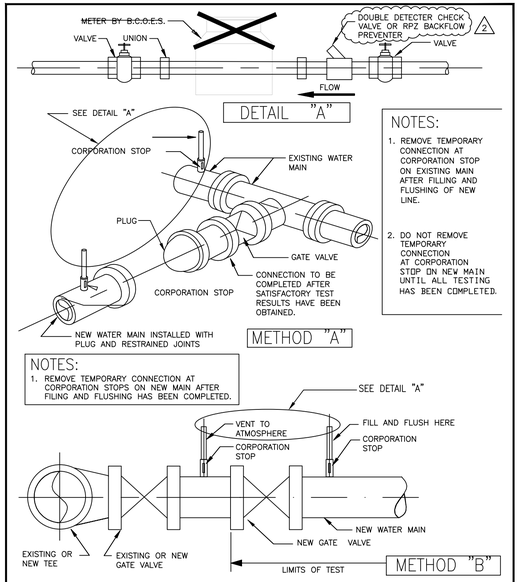

NOTES:
1. REMOVE TEMPORARY CONNECTION AT CORPORATION STOP ON EXISTING MAIN AFTER FILLING AND FLUSHING OF NEW LINE.
2. DO NOT REMOVE TEMPORARY CONNECTION AT CORPORATION STOP ON NEW MAIN UNTIL ALL TESTING HAS BEEN COMPLETED.

NOTES:
1. REMOVE TEMPORARY CONNECTION AT CORPORATION STOPS ON NEW MAIN AFTER FILING AND FLUSHING HAS BEEN COMPLETED.

Date	Revisions	Appr. by
April 2006	Removed meter and check valve	

CITY OF COCONUT CREEK
UTILITIES AND ENGINEERING DEPARTMENT

FILLING AND FLUSHING DETAIL

Date: Nov. 1999 | Scale: N.T.S. | Dwg: F104 | Fig: 104

A CORPORATION STOP SHALL BE INSTALLED WITH A LENGTH OF COPPER TUBING EXTENDING ABOVE THE GROUND. THE TUBING SHALL BE INSTALLED WITH A 180° BEND AND A VALVE.

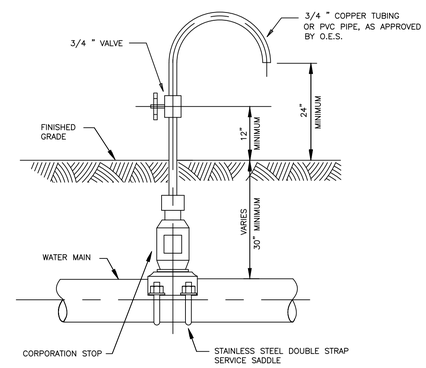

NOTES:
SAMPLING POINTS SHALL BE LOCATED AND LATER REMOVED AS REQUIRED BY BROWARD COUNTY HEALTH DEPARTMENT. CORPORATION STOP SHALL BE REMOVED AND SADDLE PLUGGED WITH A BRASS FITTING.

Date	Revisions	Appr. by

CITY OF COCONUT CREEK
UTILITIES AND ENGINEERING DEPARTMENT

BACTERIOLOGICAL DETAIL

Date: Nov. 1999 | Scale: N.T.S. | Dwg: F106 | Fig: 106

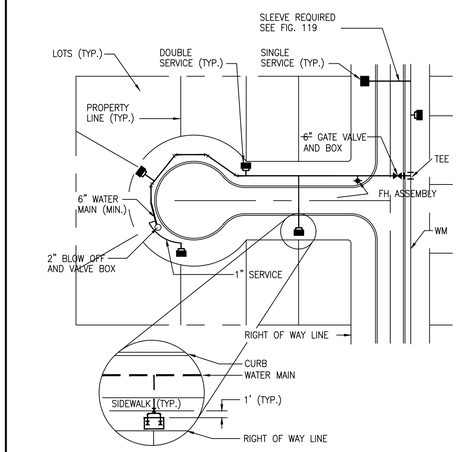

NOTES:
1. ANCHORING TYPE 90° BEND SHALL ONLY BE USED WHERE RIGHT-OF-WAY CONSTRICTIONS WILL NOT ALLOW INSTALLATION OF A STRAIGHT ASSEMBLY.
2. REFER TO SECTION 4.03-N, PARAGRAPH 6, FOR METER INSTALLATION. CONSTRICTIONS WILL NOT ALLOW INSTALLATION OF A STRAIGHT ASSEMBLY.

Date	Revisions	Appr. by
April 2006	Removed 6" Text from Gate Valve	

CITY OF COCONUT CREEK
UTILITIES AND ENGINEERING DEPARTMENT

WATER SERVICE LOCATION DETAIL

Date: Nov 1999 | Scale: N.T.S. | Dwg: F118 | Fig: 118

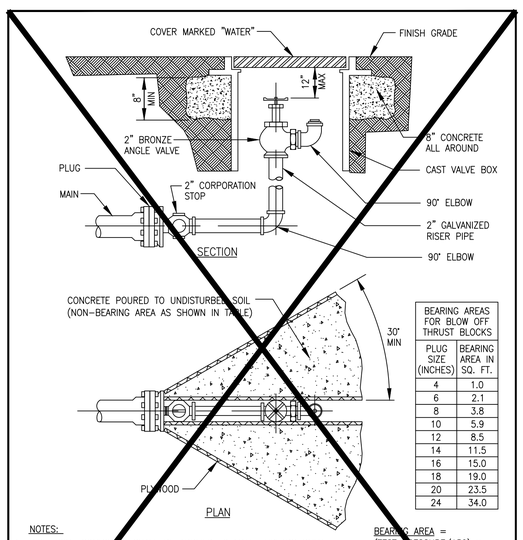

BEARING AREAS FOR BLOW OFF THRUST BLOCKS	
PLUG SIZE (INCHES)	BEARING AREA IN SQ. FT.
4	1.0
6	2.1
8	3.8
10	5.9
12	8.5
14	11.5
16	15.0
18	19.0
20	23.5
24	34.0

NOTES:
1. PIPE JOINT COMPOUND SHALL BE APPLIED TO MALE THREADS ONLY.
2. COAT ALL EXPOSED THREADS WITH BITUMASTIC BEFORE BACKFILLING.
3. 2" TOP IN BOTTOM OF PLUG.
4. PLYWOOD AND CONCRETE TO HAVE A HEIGHT EQUAL TO THE DIAMETER OF THE PIPE.

BEARING AREA = (TEST PRESSURE/150) x (2000/SOIL BEARING STRESS) x (TABLE VALUE)

Date	Revisions	Appr. by

CITY OF COCONUT CREEK
UTILITIES AND ENGINEERING DEPARTMENT

BLOW OFF VALVE DETAIL

Date: Nov. 1999 | Scale: N.T.S. | Dwg: F117 | Fig: 117

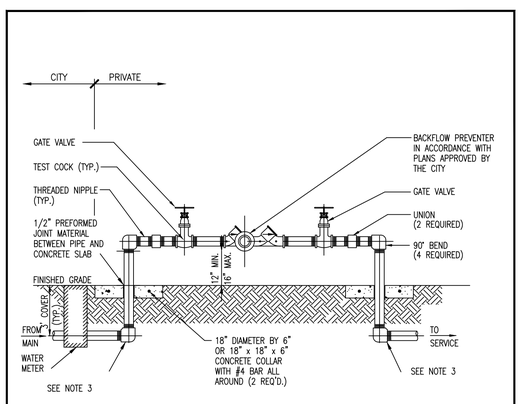

NOTES:
1. ALL PIPE AND FITTINGS 2" AND SMALLER SHALL BE THREADED BRASS, AS SHOWN. ALL 3" PIPE TO BE GALVANIZED STEEL.
2. ALL PIPE FITTINGS LARGER THAN 4" SHALL BE CEMENT-LINED DUCTILE IRON WITH FLANGED FITTINGS FOR ABOVEGROUND USE. MECHANICAL JOINT FITTINGS SHALL BE USED UNDERGROUND WITH RESTRAINED JOINTS AND THRUST COLLARS.
3. MEGALUGS, OR EQUAL, CAN BE USED IN PLACE OF RESTRAINED JOINTS ON ALL UNDERGROUND DUCTILE IRON PIPING (4" AND LARGER).
4. PAINT ALL ABOVEGROUND DUCTILE PIPING, FITTINGS AND VALVES.

Date	Revisions	Appr. by

CITY OF COCONUT CREEK
UTILITIES AND ENGINEERING DEPARTMENT

REDUCED PRESSURE BACKFLOW PREVENTER

Date: Nov. 1999 | Scale: N.T.S. | Dwg: F120 | Fig: 120

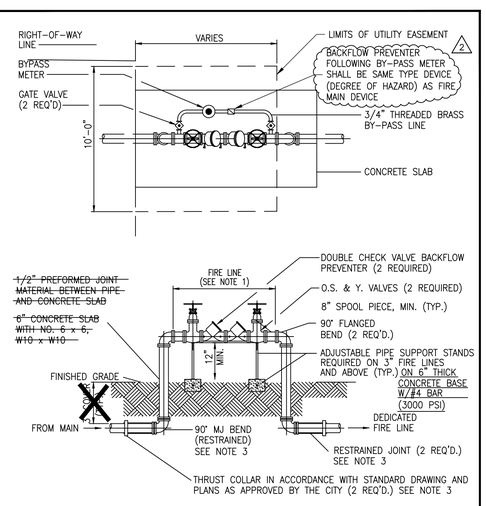

NOTES:
1. ALL PIPE AND FITTINGS 2" AND SMALLER SHALL BE THREADED BRASS.
2. ALL PIPE FITTINGS 4" DIA. AND LARGER SHALL BE CEMENT-LINED DUCTILE IRON WITH FLANGED FITTINGS FOR ABOVEGROUND USE. MECHANICAL JOINT FITTINGS SHALL BE USED UNDERGROUND.
3. MEGALUGS, OR EQUAL, CAN BE USED IN PLACE OF RESTRAINED JOINTS ON ALL UNDERGROUND PIPING.
4. PAINT ALL ABOVEGROUND DUCTILE PIPING, FITTINGS AND VALVES.

Date	Revisions	Appr. by
April 2006	Revised concrete slab under supports	

CITY OF COCONUT CREEK
UTILITIES AND ENGINEERING DEPARTMENT

FIRELINE DOUBLE DETECTOR CHECK VALVE ASSEMBLY

Date: Nov. 1999 | Scale: N.T.S. | Dwg: F121 | Fig: 121

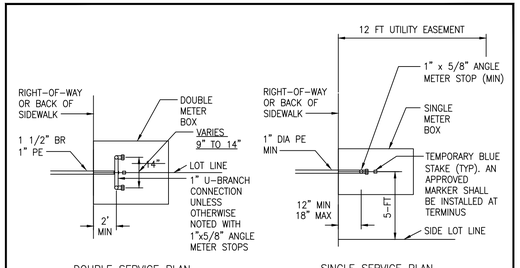

NOTES:
WATER METER TO BE INSTALLED BY THE CITY. METER BOX ~~TO~~ AND SPACER TO BE SUPPLIED BY ~~THE CITY~~ AND INSTALLED BY THE BUILDER. BACKFLOW PREVENTER SHALL BE INSTALLED DOWNSTREAM OF METER PER CODE. 18" MIN SEPARATION SHALL BE MAINTAINED BETWEEN SERVICE SADDLES
SWIVEL ADAPTER TO BE USED ON BACKFLOW SIDE OF METER.

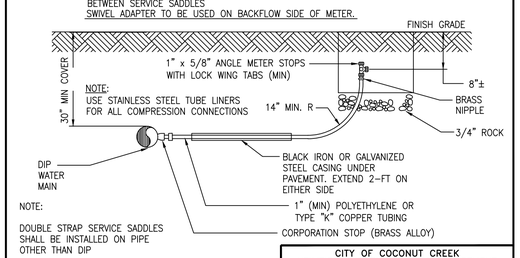

NOTE:
USE STAINLESS STEEL TUBE LINERS FOR ALL COMPRESSION CONNECTIONS

NOTE:
DOUBLE STRAP SERVICE SADDLES SHALL BE INSTALLED ON PIPE OTHER THAN DIP

Date	Revisions	Appr. by
April 2006	Modified notes regarding meter box	

CITY OF COCONUT CREEK
UTILITIES AND ENGINEERING DEPARTMENT

WATER SERVICE CONNECTION DETAILS

Date: Nov. 1999 | Scale: N.T.S. | Dwg: F119 | Fig: 119

FILE: K:\PROJECTS\15-xxx\15-3715\dwg\3715wsdt.dwg
PLOT DATE: 1/20/2016 4:20 PM BY: Andy Vennman
LAYOUT: [C-4.12]

K:\PROJECTS\15-xxx\15-3715\dwg\3715wsdt.dwg, C-4.12, 1/20/2016 4:20:52 PM, 1:1, Sun-Tech Engineering, Inc. (AEV), Sun-Tech Engineering, Inc. (AEV)

Sun-Tech Engineering, Inc.
Engineers - Planners - Surveyors
Certificate of Auth. # 7097
Phone (954)777-3123
Fax (954)777-3114
1600 West Oakland Park Boulevard
Ft. Lauderdale, FL 33311
www.suntechengi.com

REVISIONS

NO.	DATE:	DESCRIPTION

MIDTOWN RESIDENCES @ COCONUT CREEK
COCONUT CREEK FLORIDA
WATER & SEWER DETAILS

DATE: Jul. 2015
SCALE: 1" = 30'
DESIGNED BY: C.R.L.
DRAWN BY: A.E.V.
JOB NUMBER 15-3715
SHEET No. C-4.12

SEAL
Clifford R. Loutan
Jan 20 2016
CLIFFORD R. LOUTAN, P.E.
FL. REG. NO. 56890