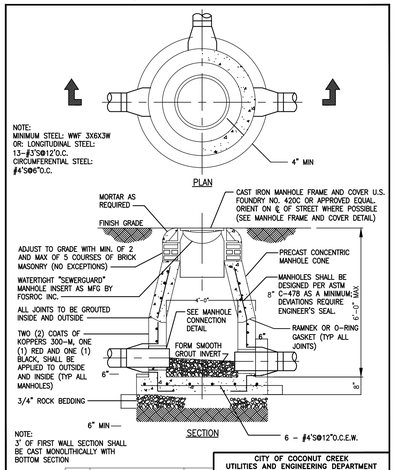

Date	Revisions	Appr. by	CITY OF COCONUT CREEK UTILITIES AND ENGINEERING DEPARTMENT			
			CONCENTRIC PRECAST MANHOLE DETAIL (8'-0" AND UNDER)			
			Date: Nov. 1999	Scale: N.T.S.	Dwg: F200	Fig: 200

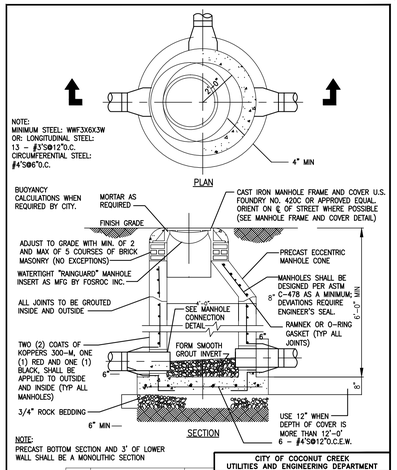

Date	Revisions	Appr. by	CITY OF COCONUT CREEK UTILITIES AND ENGINEERING DEPARTMENT			
			ECCENTRIC PRECAST MANHOLE DETAIL (8'-0" DEPTH AND GREATER)			
			Date: Nov. 1999	Scale: N.T.S.	Dwg: F200A	Fig: 200A

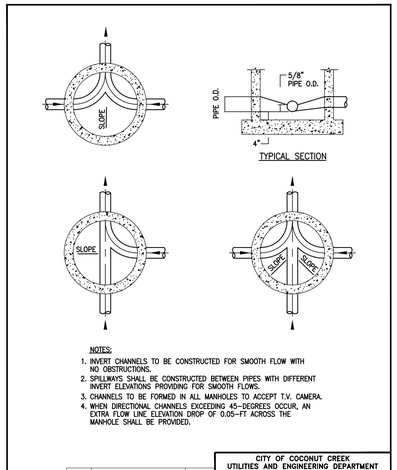

Revisions	Appr. by	CITY OF COCONUT CREEK UTILITIES AND ENGINEERING DEPARTMENT			
		MANHOLE FLOW CHANNEL DETAIL			
		Date: Dec. 1999	Scale: N.T.S.	Dwg: F200B	Fig: 200B

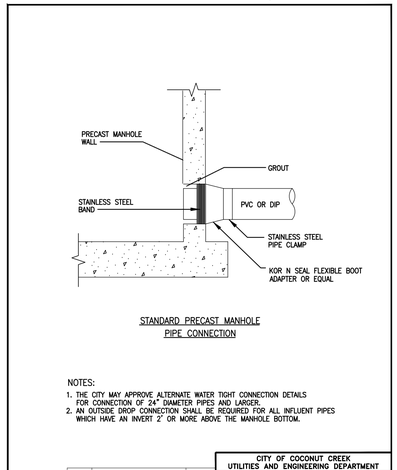

Date	Revisions	Appr. by	CITY OF COCONUT CREEK UTILITIES AND ENGINEERING DEPARTMENT			
			MANHOLE CONNECTION DETAIL (WITH BUILT-IN RUBBER BOOT)			
			Date: Nov. 1999	Scale: N.T.S.	Dwg: F201	Fig: 201

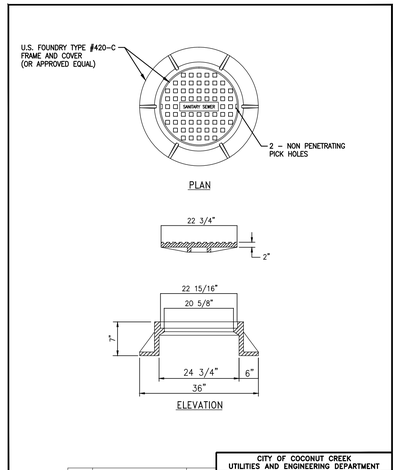

Date	Revisions	Appr. by	CITY OF COCONUT CREEK UTILITIES AND ENGINEERING DEPARTMENT			
			SANITARY MANHOLE COVER			
			Date: Nov. 1999	Scale: N.T.S.	Dwg: F203	Fig: 203

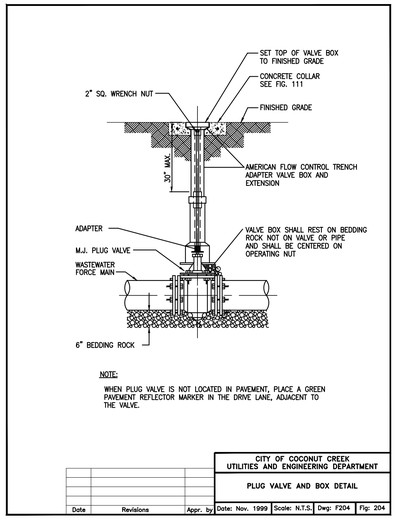

Date	Revisions	Appr. by	CITY OF COCONUT CREEK UTILITIES AND ENGINEERING DEPARTMENT			
			PLUG VALVE AND BOX DETAIL			
			Date: Nov. 1999	Scale: N.T.S.	Dwg: F204	Fig: 204

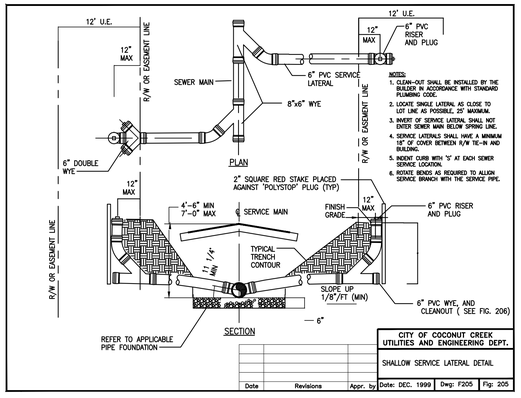

Date	Revisions	Appr. by	CITY OF COCONUT CREEK UTILITIES AND ENGINEERING DEPT.			
			SHALLOW SERVICE LATERAL DETAIL			
			Date: DEC. 1999	Dwg: F205	Fig: 205	

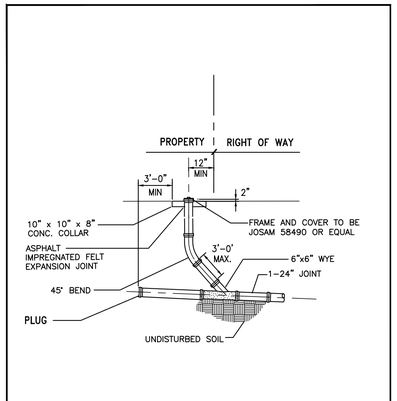

Date	Revisions	Appr. by	CITY OF COCONUT CREEK UTILITIES AND ENGINEERING DEPARTMENT			
			SANITARY SERVICE CLEANOUT DETAIL			
			Date: Dec. 1999	Scale: N.T.S.	Dwg: F206	Fig: 206

REVISIONS		BY
2-19-14	SITE PLAN RESUBMITTAL	
4-3-14	SITE PLAN RESUBMITTAL	

MIDTOWN RESIDENCES AT COCONUT CREEK

FOR:
FLORIDA CRYSTALS
LOCATED AT:
COCONUT CREEK, FLORIDA

MSA ARCHITECTS, INC.
MIAMI OFFICE
7895 SW 104th ST.
SUITE 100
MIAMI, FLORIDA 33156
(305) 273-9911

MSA ARCHITECTS
ARCHITECTURE & PLANNING

COPYRIGHT © 2011 MSA ARCHITECTS, INC. THE ARCHITECTURAL DESIGN AND DETAIL DRAWINGS FOR THIS BUILDING AND/OR OVERALL PROJECT ARE THE LEGAL PROPERTY OF AND ALL RIGHTS ARE RESERVED BY THE ARCHITECT, THEIR USE FOR REPRODUCTION, CONSTRUCTION, OR DISTRIBUTION IS PROHIBITED UNLESS AUTHORIZED IN WRITING BY THE ARCHITECT.

SEWER DETAILS

CONSULTING ENGINEERING & SCIENCE, INC.
10700 N. KENDALL DRIVE SUITE 400
MIAMI, FLORIDA 33176 (305)-378-5555
EB-0003255

FOR THE FIRM:
RICHARD B. BOCHNOVICH
PE-19833 (CIVIL)

CES PROJECT NO.: 13075

DRAWN	
CHECKED	-
DATE	12/19/2013
SCALE	AS SHOWN
JOB NO.	
SHEET	

C-8

OF SHEETS