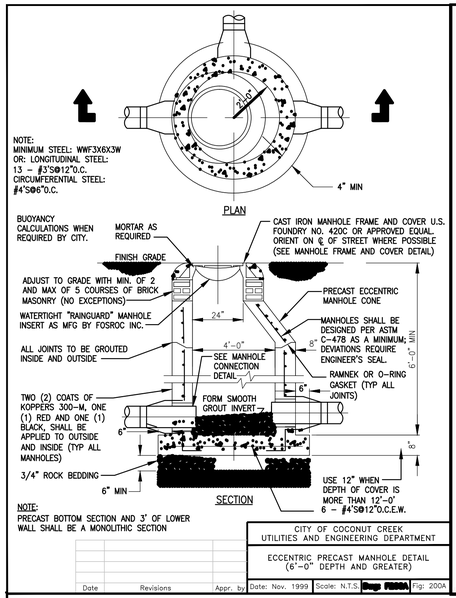

CITY OF COCONUT CREEK
UTILITIES AND ENGINEERING DEPARTMENT

ECCENTRIC PRECAST MANHOLE DETAIL
(6'-0" DEPTH AND GREATER)

Date	Revisions	Appr. by	Date: Nov. 1999	Scale: N.T.S.	Dwg: F200A	Fig: 200A

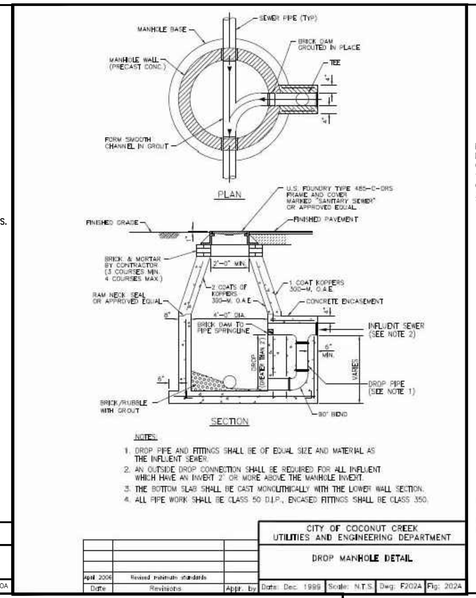

Date	Revisions	Appr. by
April 2006	Revised materials standards	

CITY OF COCONUT CREEK
UTILITIES AND ENGINEERING DEPARTMENT

DROP MANHOLE DETAIL

Date: Dec. 1999	Scale: N.T.S.	Dwg: F202A	Fig: 202A

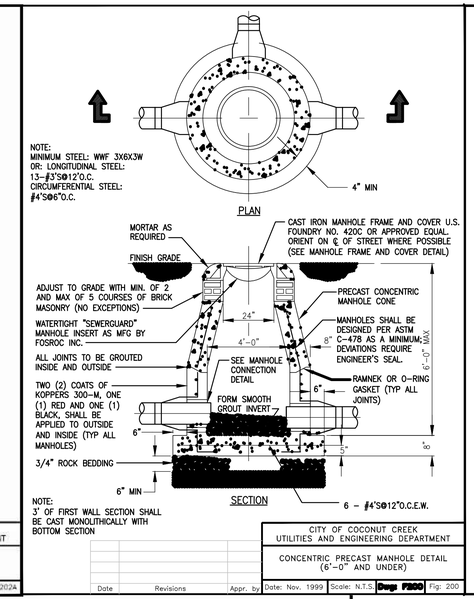

CITY OF COCONUT CREEK
UTILITIES AND ENGINEERING DEPARTMENT

CONCENTRIC PRECAST MANHOLE DETAIL
(6'-0" AND UNDER)

Date	Revisions	Appr. by	Date: Nov. 1999	Scale: N.T.S.	Dwg: F200	Fig: 200

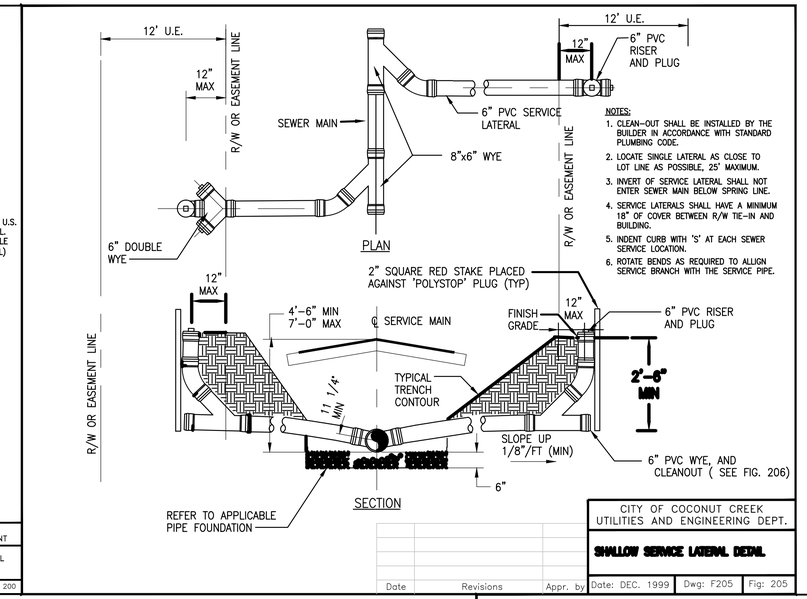

CITY OF COCONUT CREEK
UTILITIES AND ENGINEERING DEPT.

SHALLOW SERVICE LATERAL DETAIL

Date	Revisions	Appr. by	Date: DEC. 1999	Dwg: F205	Fig: 205

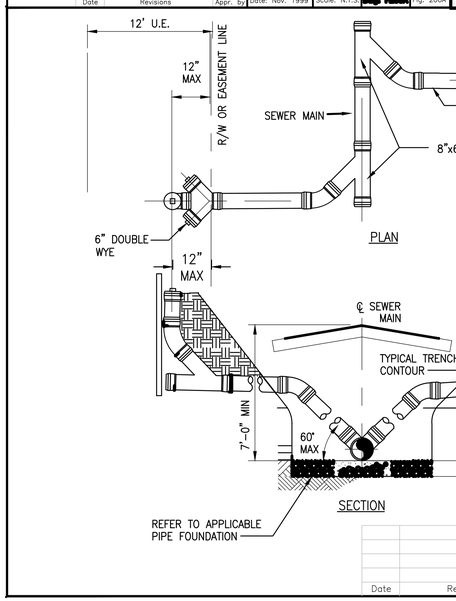

CITY OF COCONUT CREEK
UTILITIES AND ENGINEERING DEPT.

DEEP SERVICE LATERAL DETAIL

Date	Revisions	Appr. by	Date: Nov. 1999	Dwg: F205A	Fig: 205A

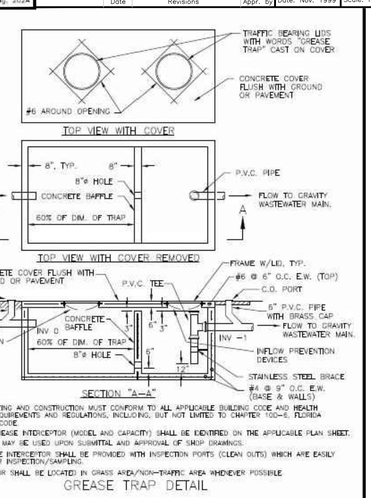

Date	Revisions	Appr. by

CITY OF COCONUT CREEK
UTILITIES AND ENGINEERING DEPARTMENT

GREASE TRAP DETAIL

Date: April 2006	Scale: N.T.S.	Dwg: F250	Fig: 250

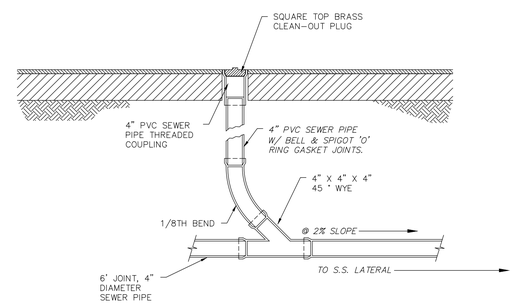

4" DIAMETER SANITARY CLEAN-OUT

N.T.S.

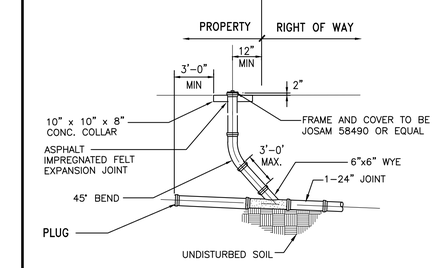

Date	Revisions	Appr. by

CITY OF COCONUT CREEK
UTILITIES AND ENGINEERING DEPARTMENT

SANITARY SERVICE CLEANOUT DETAIL

Date: Dec. 1999	Scale: N.T.S.	Dwg: F206	Fig: 206

Ron T. Frump
LICENSE No. 71653 STATE OF FLORIDA
ISSUED FOR SITE PLAN REVIEW

THE CONTINEO GROUP
FL CERTIFICATE OF AUTHORIZATION NUMBER 27000
THE CONTINEO GROUP
572 OAKDALE ROAD, ATLANTA, GA 30307
WWW.THECONTINEOGROUP.COM

SKYE GROUP
1100 SUPERIOR AVE., SUITE 600
CLEVELAND OH 44114
(216) 658-4300
SKYE-GROUP.NET

GARRISON INVESTMENT GROUP
GARRISON INVESTMENT GROUP OF AMERICA, SUITE 905
1330 AVENUE OF THE AMERICAS
NEW YORK, NY 10019 212.372.9500
WWW.GARRISONIV.COM

#	DATE	REVISIONS	BY

These drawings and the designs represented herein, are the exclusive property of The Contineo Group and are not to be reproduced, changed or copied in any form or manner whatsoever, nor are they to be assigned to any third party, without first obtaining the express written consent of The Contineo Group. In the event of unauthorized reuse of these drawings and designs by a third party, the user agrees to indemnify and hold The Contineo Group harmless for any and all liability, losses or damages arising out of such reuse.

COOPER'S HAWK
WINERY & RESTAURANT
AT THE PROMENADE AT COCONUT CREEK

JURSIDICTION: CITY OF COCONUT CREEK

LANDLOT: SECTION 18, TOWNSHIP 48 SOUTH, RANGE 42 EAST, BROWARD COUNTY

LOCATION: PROMENADE AT COCONUT CREEK
4473 LYONS ROAD
COCONUT CREEK, FL 33073

WASTEWATER DETAILS

JOB NO:	SHEET
15-187	C7.2
DATE: 02/16/16	PLAN REVIEW