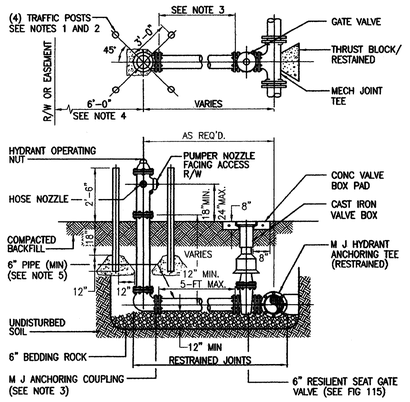

NOTES:
1. HYDRANT GUARDS TO BE 4" DIAMETER GALVANIZED STEEL PIPE FILLED WITH CONCRETE AND TO BE PLACED AT LOCATION AS REQUESTED BY THE CITY ENGINEER.
2. OMIT REAR GUARDS IN LOCATION WHERE SIDEWALKS EXIST.
3. USE MECHANICAL JOINT RETAINER GLAND CLOW MODEL NO. F1058 OR APPROVED EQUAL.
4. HYDRANT SETBACK SHALL BE SET TO A DISTANCE OF 7-FT MAXIMUM AND 4-FT MINIMUM FROM THE EDGE OF PAVEMENT OR CONFORM TO D.O.T. REQUIREMENTS WHERE APPLICABLE.
5. SERVICE LINES FOR FIRE HYDRANTS TO BE SIZED TO ALLOW A MINIMUM OF 20 PSI RESIDUAL PRESSURE AT THE HYDRANT UNDER FIRE FLOW CONDITIONS.
6. TWO BLUE REFLECTIVE PAVEMENT MARKERS FOR IDENTIFICATION OF THE HYDRANT AND ITS VALVE LOCATION SHALL BE INSTALLED ON THE CENTER OF THE ADJACENT PAVED DRIVE LANE TO THE HYDRANT; MARKERS SHALL BE SPACED 1-FT APART, PERPENDICULAR TO THE ROAD CENTERLINE.

Date	Revisions	Appr. by	CITY OF COCONUT CREEK UTILITIES AND ENGINEERING DEPARTMENT			
			FIRE HYDRANT ASSEMBLY DETAIL			
			Date: Nov. 1999	Scale: N.T.S.	Dwg: F103	Fig: 103

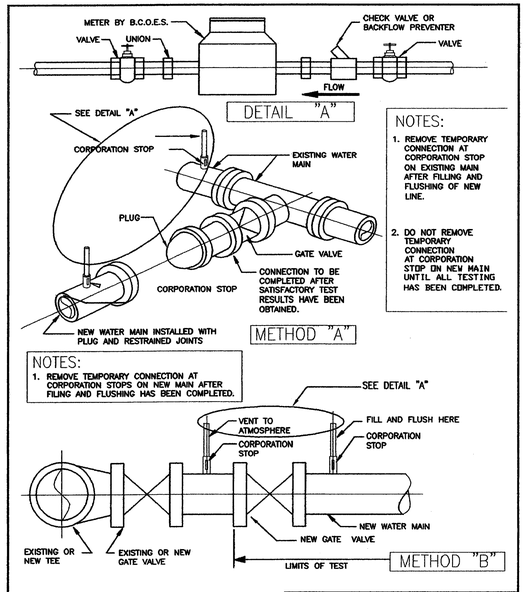

NOTES:
1. REMOVE TEMPORARY CONNECTION AT CORPORATION STOP ON NEW MAIN AFTER FILLING AND FLUSHING OF NEW LINE.
2. DO NOT REMOVE TEMPORARY CONNECTION AT CORPORATION STOP ON NEW MAIN UNTIL ALL TESTING HAS BEEN COMPLETED.

NOTES:
1. REMOVE TEMPORARY CONNECTION AT CORPORATION STOPS ON NEW MAIN AFTER FILING AND FLUSHING HAS BEEN COMPLETED.

Date	Revisions	Appr. by	CITY OF COCONUT CREEK UTILITIES AND ENGINEERING DEPARTMENT			
			FILLING AND FLUSHING DETAIL			
			Date: Nov. 1999	Scale: N.T.S.	Dwg: F104	Fig: 104

A CORPORATION STOP SHALL BE INSTALLED WITH A LENGTH OF COPPER TUBING EXTENDING ABOVE THE GROUND. THE TUBING SHALL BE INSTALLED WITH A 180° BEND AND A VALVE.

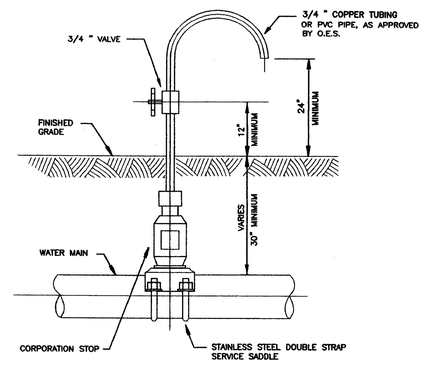

NOTES:
SAMPLING POINTS SHALL BE LOCATED AND LATER REMOVED AS REQUIRED BY BROWARD COUNTY HEALTH DEPARTMENT. CORPORATION STOP SHALL BE REMOVED AND SADDLE PLUGGED WITH A BRASS FITTING.

Date	Revisions	Appr. by	CITY OF COCONUT CREEK UTILITIES AND ENGINEERING DEPARTMENT			
			BACTERIOLOGICAL DETAIL			
			Date: Nov. 1999	Scale: N.T.S.	Dwg: F106	Fig: 106

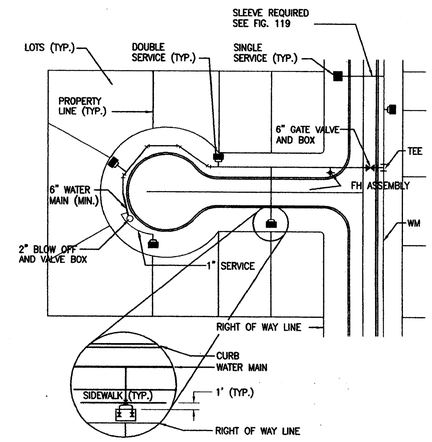

NOTES:
1. ANCHORING TYPE 90° BEND SHALL ONLY BE USED WHERE RIGHT-OF-WAY CONSTRICTIONS WILL NOT ALLOW INSTALLATION OF A STRAIGHT ASSEMBLY.
2. REFER TO SECTION 4.03-N, PARAGRAPH 6, FOR METER INSTALLATION. CONSTRICTIONS WILL NOT ALLOW INSTALLATION OF A STRAIGHT ASSEMBLY.

Date	Revisions	Appr. by	CITY OF COCONUT CREEK UTILITIES AND ENGINEERING DEPARTMENT			
			WATER SERVICE LOCATION DETAIL			
			Date: Nov 1999	Scale: N.T.S.	Dwg: F118	Fig: 118

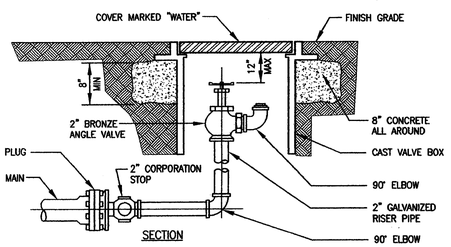

SECTION

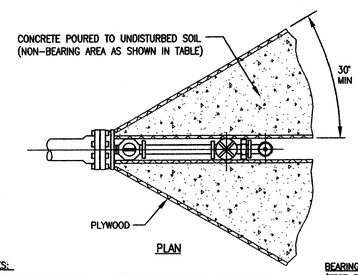

PLAN

BEARING AREAS FOR BLOW OFF THRUST BLOCKS	
PLUG SIZE (INCHES)	BEARING AREA IN SQ. FT.
4	1.0
6	2.1
8	3.8
10	5.9
12	8.5
14	11.5
16	15.0
18	19.0
20	23.5
24	34.0

NOTES:
1. PIPE JOINT COMPOUND SHALL BE APPLIED TO MALE THREADS ONLY.
2. COAT ALL EXPOSED THREADS WITH BITUMASTIC BEFORE BACKFILLING.
3. 2" TOP IN BOTTOM OF PLUG.
4. PLYWOOD AND CONCRETE TO HAVE A HEIGHT EQUAL TO THE DIAMETER OF THE PIPE.

BEARING AREA = (TEST PRESSURE/150) x (2000/SOIL BEARING STRESS) x (TABLE VALUE)

Date	Revisions	Appr. by	CITY OF COCONUT CREEK UTILITIES AND ENGINEERING DEPARTMENT			
			BLOW OFF VALVE DETAIL			
			Date: Nov. 1999	Scale: N.T.S.	Dwg: F117	Fig: 117

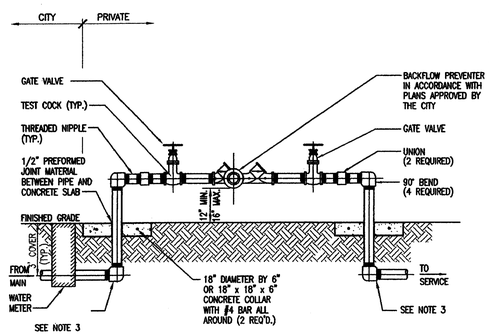

NOTES:
1. ALL PIPE AND FITTINGS 2" AND SMALLER SHALL BE THREADED BRASS, AS SHOWN. ALL 3" PIPE TO BE GALVANIZED STEEL.
2. ALL PIPE FITTINGS LARGER THAN 4" SHALL BE CEMENT-LINED DUCTILE IRON WITH FLANGED FITTINGS FOR ABOVEGROUND USE. MECHANICAL JOINT FITTINGS SHALL BE USED UNDERGROUND WITH RESTRAINED JOINTS AND THRUST COLLARS.
3. MEGALUGS, OR EQUAL, CAN BE USED IN PLACE OF RESTRAINED JOINTS ON ALL UNDERGROUND DUCTILE IRON PIPING (4" AND LARGER).
4. PAINT ALL ABOVEGROUND DUCTILE PIPING, FITTINGS AND VALVES.

Date	Revisions	Appr. by	CITY OF COCONUT CREEK UTILITIES AND ENGINEERING DEPARTMENT			
			REDUCED PRESSURE BACKFLOW PREVENTER			
			Date: Nov. 1999	Scale: N.T.S.	Dwg: F120	Fig: 120

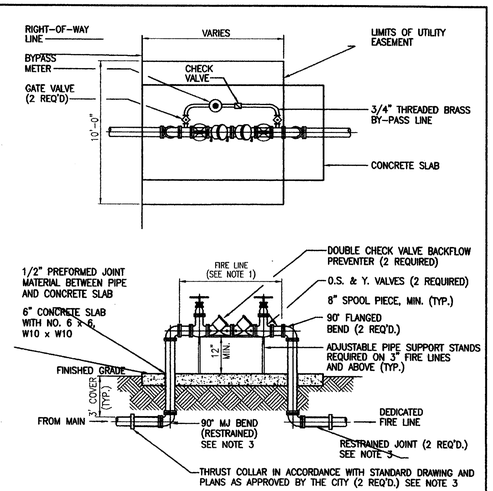

NOTES:
1. ALL PIPE AND FITTINGS 2" AND SMALLER SHALL BE THREADED BRASS.
2. ALL PIPE FITTINGS 4" DIA. AND LARGER SHALL BE CEMENT-LINED DUCTILE IRON WITH FLANGED FITTINGS FOR ABOVEGROUND USE. MECHANICAL JOINT FITTINGS SHALL BE USED UNDERGROUND.
3. MEGALUGS, OR EQUAL, CAN BE USED IN PLACE OF RESTRAINED JOINTS ON ALL UNDERGROUND PIPING.
4. PAINT ALL ABOVEGROUND DUCTILE PIPING, FITTINGS AND VALVES.

Date	Revisions	Appr. by	CITY OF COCONUT CREEK UTILITIES AND ENGINEERING DEPARTMENT			
			FIRELINE DOUBLE DETECTOR CHECK VALVE ASSEMBLY			
			Date: Nov. 1999	Scale: N.T.S.	Dwg: F121	Fig: 121

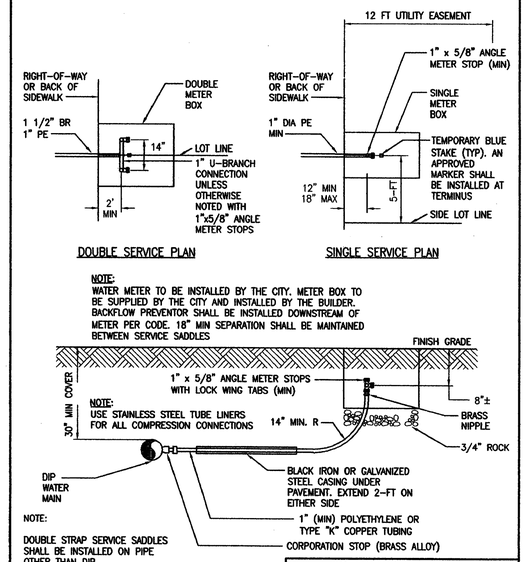

NOTE:
WATER METER TO BE INSTALLED BY THE CITY. METER BOX TO BE SUPPLIED BY THE CITY AND INSTALLED BY THE BUILDER. BACKFLOW PREVENTOR SHALL BE INSTALLED DOWNSTREAM OF METER PER CODE. 18" MIN SEPARATION SHALL BE MAINTAINED BETWEEN SERVICE SADDLES

NOTE:
USE STAINLESS STEEL TUBE LINERS FOR ALL COMPRESSION CONNECTIONS

NOTE:
DOUBLE STRAP SERVICE SADDLES SHALL BE INSTALLED ON PIPE OTHER THAN DIP

Date	Revisions	Appr. by	CITY OF COCONUT CREEK UTILITIES AND ENGINEERING DEPARTMENT			
			WATER SERVICE CONNECTION DETAILS			
			Date: Nov. 1999	Scale: N.T.S.	Dwg: F119	Fig: 119

FILE: K:\PROJECTS\01-xxx\01-2486\DWG\2486wsdt.dwg
DATE: Dec 03, 2001 - 2:38pm EST

APR 2002

Sun-Tech Engineering, Inc.
Engineers - Planners - Surveyors
TECH
1600 West Oakland Park Boulevard
Ft. Lauderdale, FL 33311
E-Mail: suntech@suntechengineering.com
Phone (954)777-3123
Fax (954)777-3114

REVISIONS

NO.	DATE:	DESCRIPTION
1	8/11/01	PER CITY REVIEW

WESTCREEK COMMONS
COCONUT CREEK BROWARD COUNTY, FL.
WATER & SEWER DETAILS

DATE: NOV 2001
SCALE: N.T.S.
DESIGNED BY: M.G.
DRAWN BY: A.E.V.
JOB NUMBER 01-2486
SHEET No. WS3

SEAL
RECEIVED
APR 0 9 2002
Sites Construction