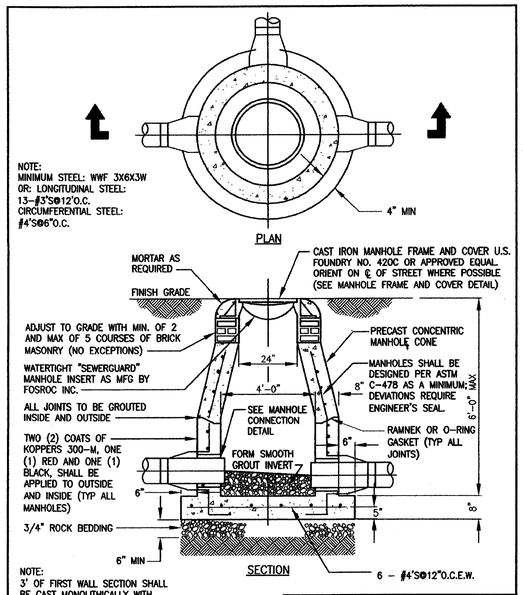

Date	Revisions	Appr. by	CITY OF COCONUT CREEK UTILITIES AND ENGINEERING DEPARTMENT			
			CONCENTRIC PRECAST MANHOLE DETAIL (6'-0" AND UNDER)			
			Date: Nov. 1999	Scale: N.T.S.	Dwg: F200	Fig: 200

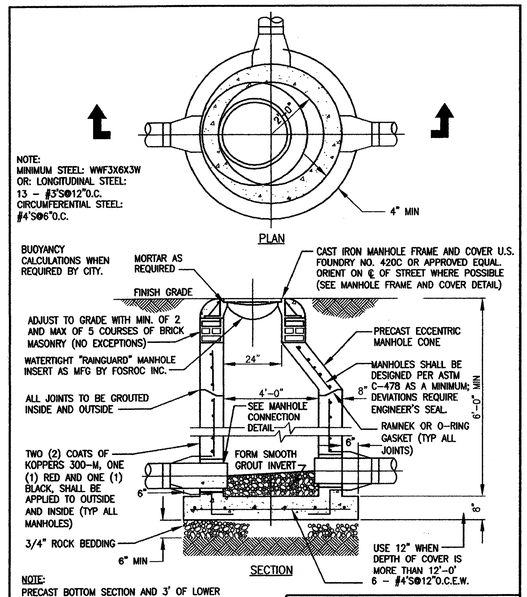

Date	Revisions	Appr. by	CITY OF COCONUT CREEK UTILITIES AND ENGINEERING DEPARTMENT			
			ECCENTRIC PRECAST MANHOLE DETAIL (6'-0" DEPTH AND GREATER)			
			Date: Nov. 1999	Scale: N.T.S.	Dwg: F200A	Fig: 200A

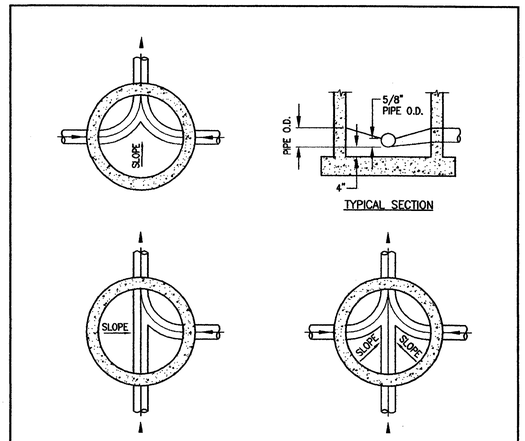

NOTES:

1. INVERT CHANNELS TO BE CONSTRUCTED FOR SMOOTH FLOW WITH NO OBSTRUCTIONS.
2. SPILLWAYS SHALL BE CONSTRUCTED BETWEEN PIPES WITH DIFFERENT INVERT ELEVATIONS PROVIDING FOR SMOOTH FLOWS.
3. CHANNELS TO BE FORMED IN ALL MANHOLES TO ACCEPT T.V. CAMERA.
4. WHEN DIRECTIONAL CHANNELS EXCEEDING 45-DEGREES OCCUR, AN EXTRA FLOW LINE ELEVATION DROP OF 0.05-FT ACROSS THE MANHOLE SHALL BE PROVIDED.

Date	Revisions	Appr. by	CITY OF COCONUT CREEK UTILITIES AND ENGINEERING DEPARTMENT			
			MANHOLE FLOW CHANNEL DETAIL			
			Date: Dec. 1999	Scale: N.T.S.	Dwg: F200B	Fig: 200B

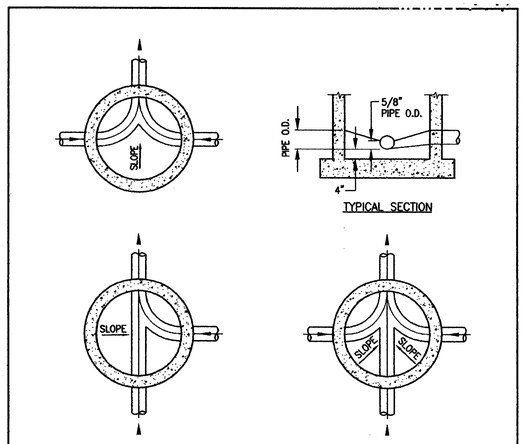

NOTES:

1. INVERT CHANNELS TO BE CONSTRUCTED FOR SMOOTH FLOW WITH NO OBSTRUCTIONS.
2. SPILLWAYS SHALL BE CONSTRUCTED BETWEEN PIPES WITH DIFFERENT INVERT ELEVATIONS PROVIDING FOR SMOOTH FLOWS.
3. CHANNELS TO BE FORMED IN ALL MANHOLES TO ACCEPT T.V. CAMERA.
4. WHEN DIRECTIONAL CHANNELS EXCEEDING 45-DEGREES OCCUR, AN EXTRA FLOW LINE ELEVATION DROP OF 0.05-FT ACROSS THE MANHOLE SHALL BE PROVIDED.

Date	Revisions	Appr. by	CITY OF COCONUT CREEK UTILITIES AND ENGINEERING DEPARTMENT			
			MANHOLE FLOW CHANNEL DETAIL			
			Date: Dec. 1999	Scale: N.T.S.	Dwg: F200B	Fig: 200B

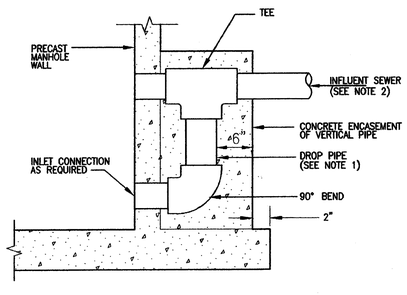

STANDARD DROP DETAIL

NOTES:

1. DROP PIPE AND FITTINGS SHALL BE OF EQUAL SIZE AND MATERIAL AS THE INFLUENT SEWER.
2. AN OUTSIDE DROP CONNECTION SHALL BE REQUIRED FOR ALL INFLUENT WHICH HAVE AN INVERT 2' OR MORE ABOVE THE MANHOLE INVERT.

Date	Revisions	Appr. by	CITY OF COCONUT CREEK UTILITIES AND ENGINEERING DEPARTMENT			
			DROP MANHOLE DETAIL			
			Date: Dec. 1999	Scale: N.T.S.	Dwg: F202	Fig: 202

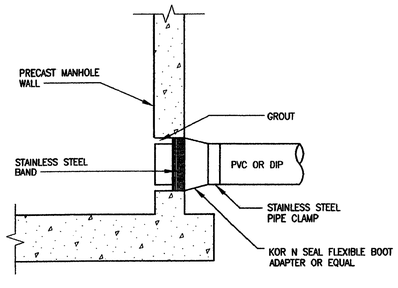

STANDARD PRECAST MANHOLE PIPE CONNECTION

NOTES:

1. THE CITY MAY APPROVE ALTERNATE WATER TIGHT CONNECTION DETAILS FOR CONNECTION OF 24" DIAMETER PIPES AND LARGER.
2. AN OUTSIDE DROP CONNECTION SHALL BE REQUIRED FOR ALL INFLUENT PIPES WHICH HAVE AN INVERT 2' OR MORE ABOVE THE MANHOLE BOTTOM.

Date	Revisions	Appr. by	CITY OF COCONUT CREEK UTILITIES AND ENGINEERING DEPARTMENT			
			MANHOLE CONNECTION DETAIL (WITH BUILT-IN RUBBER BOOT)			
			Date: Nov. 1999	Scale: N.T.S.	Dwg: F201	Fig: 201

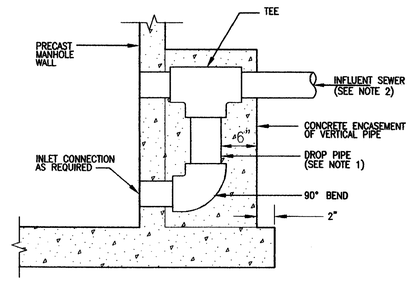

STANDARD DROP DETAIL

NOTES:

1. DROP PIPE AND FITTINGS SHALL BE OF EQUAL SIZE AND MATERIAL AS THE INFLUENT SEWER.
2. AN OUTSIDE DROP CONNECTION SHALL BE REQUIRED FOR ALL INFLUENT WHICH HAVE AN INVERT 2' OR MORE ABOVE THE MANHOLE INVERT.

Date	Revisions	Appr. by	CITY OF COCONUT CREEK UTILITIES AND ENGINEERING DEPARTMENT			
			DROP MANHOLE DETAIL			
			Date: Dec. 1999	Scale: N.T.S.	Dwg: F202	Fig: 202

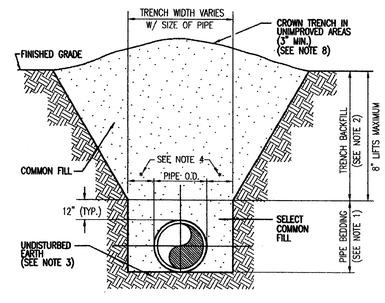

NOTES:

1. PIPE BEDDING: SELECT COMMON FILL COMPACTED TO 100% OF THE MAXIMUM DENSITY AS PER AASHTO T-99-C.
2. TRENCH BACKFILL: COMMON FILL COMPACTED TO 100% OF THE MAXIMUM DENSITY AS PER AASHTO T-99-C.
3. PIPE BEDDING UTILIZING SELECT COMMON FILL OR BEDDING ROCK IN ACCORDANCE WITH TYPE A BEDDING AND TRENCHING DETAIL MAY BE REQUIRED AS DIRECTED BY THE CITY OF COCONUT CREEK.
4. (*): 15" MAX. FOR PIPE DIAMETER LESS THAN 24", AND 24" MAX. FOR PIPE DIAMETER 24" AND LARGER.
5. WATER SHALL NOT BE PERMITTED IN THE TRENCH DURING CONSTRUCTION.
6. ALL PIPE TO BE INSTALLED WITH BELL FACING UPSTREAM TO THE DIRECTION OF THE FLOW.
7. REFER TO SECTION 2.18-E OF THE MANUAL FOR SHEETING AND BRACING IN EXCAVATIONS.
8. FINAL RESTORATION IN IMPROVED AREAS SHALL BE IN COMPLIANCE WITH ALL APPLICABLE REGULATIONS OF GOVERNING AGENCIES. SURFACE RESTORATION WITHIN CITY OR COUNTY RIGHT-OF-WAY SHALL COMPLY WITH THE APPLICABLE REGULATIONS.

Date	Revisions	Appr. by	CITY OF COCONUT CREEK UTILITIES AND ENGINEERING DEPARTMENT			
			TYPE B BEDDING AND TRENCHING DETAIL			
			Date: Nov. 1999	Scale: N.T.S.	Dwg: F010	Fig: 010

FILE: K:\PROJECTS\01-xxx\01-2486\DWG\2486wsdt.dwg
DATE: Dec 03, 2001 - 2:37pm EST

Sun-Tech Engineering, Inc.
Engineers - Planners - Surveyors
TECH
1600 West Oakland Park Boulevard
Ft. Lauderdale, FL 33311
E-Mail: suntech@suntechengineering.com
Phone (954)777-3123
Fax (954)777-3114

REVISIONS

NO.	DATE:	DESCRIPTION
1	8/15/01	PER CITY REVIEW

WESTCREEK COMMONS
COCONUT CREEK BROWARD COUNTY, FL.
SEWER DETAILS

DATE: NOV 2001
SCALE: N.T.S.
DESIGNED BY: M.G.
DRAWN BY: A.E.V.
JOB NUMBER 01-2486
SHEET No. WS5

SEAL
APR 2002