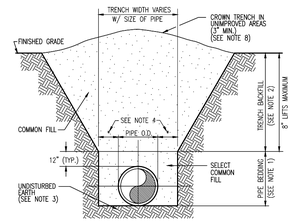

NOTES:

1. PIPE BEDDING: SELECT COMMON FILL COMPACTED TO 100% OF THE MAXIMUM DENSITY AS PER ASHTO T-99-C.
2. TRENCH BACKFILL: COMMON FILL COMPACTED TO 100% OF THE MAXIMUM DENSITY AS PER ASHTO T-99-C.
3. PIPE BEDDING UTILIZING SELECT COMMON FILL OR BEDDING ROCK IN ACCORDANCE WITH TYPE A BEDDING AND TRENCHING DETAIL MAY BE REQUIRED AS DIRECTED BY THE CITY OF COCONUT CREEK.
4. (*): 15" MAX. FOR PIPE DIAMETER LESS THAN 24", AND 24" MAX. FOR PIPE DIAMETER 24" AND LARGER.
5. WATER SHALL NOT BE PERMITTED IN THE TRENCH DURING CONSTRUCTION.
6. ALL PIPE TO BE INSTALLED WITH BELL FACING UPSTREAM TO THE DIRECTION OF THE FLOW.
7. REFER TO SECTION 2.18-E OF THE MANUAL FOR SHEETING AND BRACING IN EXCAVATIONS.
8. FINAL RESTORATION IN IMPROVED AREAS SHALL BE IN COMPLIANCE WITH ALL APPLICABLE REGULATIONS OF GOVERNING AGENCIES. SURFACE RESTORATION WITHIN CITY OR COUNTY RIGHT-OF-WAY SHALL COMPLY WITH THE APPLICABLE REGULATIONS.

CITY OF COCONUT CREEK
UTILITIES AND ENGINEERING DEPARTMENT

TYPE B BEDDING AND TRENCHING DETAIL

Date	Revisions	Appr. by	Date: Nov. 1999	Scale: N.T.S.	Dwg: F010	Fig: 010

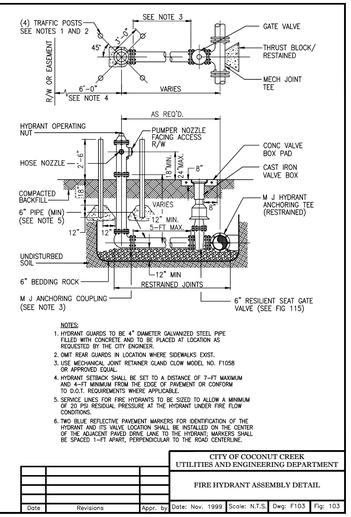

NOTES:

1. HYDRANT GUARDS TO BE 4" DIAMETER GALVANIZED STEEL PIPE FILLED WITH CONCRETE AND TO BE PLACED AT LOCATION AS REQUESTED BY THE CITY ENGINEER.
2. OMIT REAR GUARDS IN LOCATION WHERE SIDEWALKS EXIST.
3. USE MECHANICAL JOINT RETAINER GLAND CLOW MODEL NO. F1058 OR APPROVED EQUAL.
4. HYDRANT SETBACK SHALL BE SET TO A DISTANCE OF 7-FT MAXIMUM AND 4-FT MINIMUM FROM THE EDGE OF PAVEMENT OR CONFORM TO D.O.T. REQUIREMENTS WHERE APPLICABLE.
5. SERVICE LINES FOR FIRE HYDRANTS TO BE SIZED TO ALLOW A MINIMUM OF 20 PSI RESIDUAL PRESSURE AT THE HYDRANT UNDER FIRE FLOW CONDITIONS.
6. TWO BLUE REFLECTIVE PAVEMENT MARKERS FOR IDENTIFICATION OF THE HYDRANT AND ITS VALVE LOCATION SHALL BE INSTALLED ON THE CENTER OF THE ADJACENT PAVED DRIVE LANE TO THE HYDRANT; MARKERS SHALL BE SPACED 1-FT APART, PERPENDICULAR TO THE ROAD CENTERLINE.

CITY OF COCONUT CREEK
UTILITIES AND ENGINEERING DEPARTMENT

FIRE HYDRANT ASSEMBLY DETAIL

Date	Revisions	Appr. by	Date: Nov. 1999	Scale: N.T.S.	Dwg: F103	Fig: 103

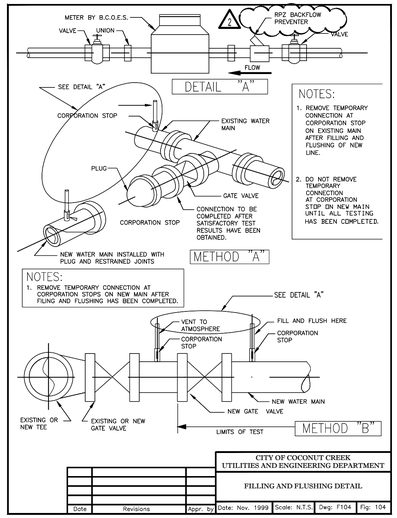

NOTES:

1. REMOVE TEMPORARY CONNECTION AT CORPORATION STOP ON NEW MAIN AFTER FILLING AND FLUSHING HAS BEEN COMPLETED.
2. DO NOT REMOVE TEMPORARY CONNECTION AT CORPORATION STOP ON NEW MAIN UNTIL ALL TESTING HAS BEEN COMPLETED.

NOTES:

1. REMOVE TEMPORARY CONNECTION AT CORPORATION STOPS ON NEW MAIN AFTER FILLING AND FLUSHING HAS BEEN COMPLETED.

CITY OF COCONUT CREEK
UTILITIES AND ENGINEERING DEPARTMENT

FILLING AND FLUSHING DETAIL

Date	Revisions	Appr. by	Date: Nov. 1999	Scale: N.T.S.	Dwg: F104	Fig: 104

A CORPORATION STOP SHALL BE INSTALLED WITH A LENGTH OF COPPER TUBING EXTENDING ABOVE THE GROUND. THE TUBING SHALL BE INSTALLED WITH A 180° BEND AND A VALVE.

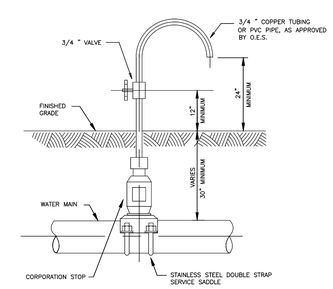

NOTES:

SAMPLING POINTS SHALL BE LOCATED AND LATER REMOVED AS REQUIRED BY BROWARD COUNTY HEALTH DEPARTMENT. CORPORATION STOP SHALL BE REMOVED AND SADDLE PLUGGED WITH A BRASS FITTING.

CITY OF COCONUT CREEK
UTILITIES AND ENGINEERING DEPARTMENT

BACTERIOLOGICAL DETAIL

Date	Revisions	Appr. by	Date: Nov. 1999	Scale: N.T.S.	Dwg: F106	Fig: 106

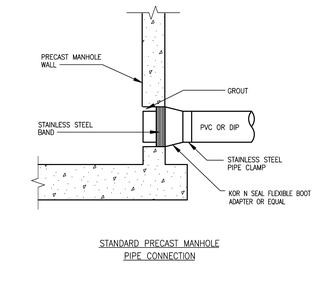

STANDARD PRECAST MANHOLE PIPE CONNECTION

NOTES:

1. THE CITY MAY APPROVE ALTERNATE WATER TIGHT CONNECTION DETAILS FOR CONNECTION OF 24" DIAMETER PIPES AND LARGER.
2. AN OUTSIDE DROP CONNECTION SHALL BE REQUIRED FOR ALL INFLUENT PIPES WHICH HAVE AN INVERT 2' OR MORE ABOVE THE MANHOLE BOTTOM.

CITY OF COCONUT CREEK
UTILITIES AND ENGINEERING DEPARTMENT

MANHOLE CONNECTION DETAIL (WITH BUILT-IN RUBBER BOOT)

Date	Revisions	Appr. by	Date: Nov. 1999	Scale: N.T.S.	Dwg: F201	Fig: 201

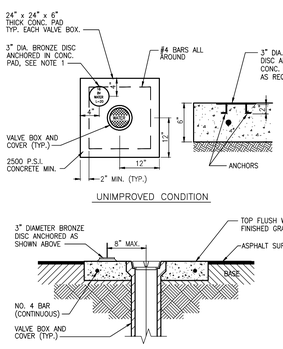

NOTES:

1. BRONZE DISC TO BE SUPPLIED BY CITY.
2. AMERICAN FLOW CONTROL TRENCH ADAPTER VALVE BOX AND EXTENSION IS PREFERRED.

CITY OF COCONUT CREEK
UTILITIES AND ENGINEERING DEPARTMENT

VALVE COLLAR DETAIL

Date	Revisions	Appr. by	Date: Nov. 1999	Scale: N.T.S.	Dwg: F111	Fig: 111

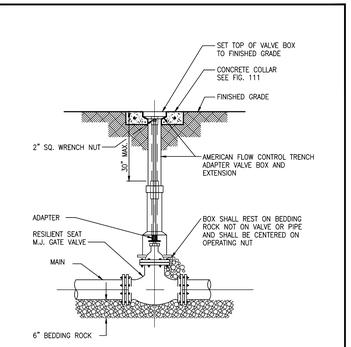

NOTES:

WHEN VALVE IS NOT LOCATED IN PAVEMENT, PLACE A WHITE PAVEMENT REFLECTOR MARKER IN THE DRIVE LANE, ADJACENT TO THE VALVE.

CITY OF COCONUT CREEK
UTILITIES AND ENGINEERING DEPARTMENT

GATE VALVE AND BOX DETAIL

Date	Revisions	Appr. by	Date: Nov. 1999	Scale: N.T.S.	Dwg: F115	Fig: 115

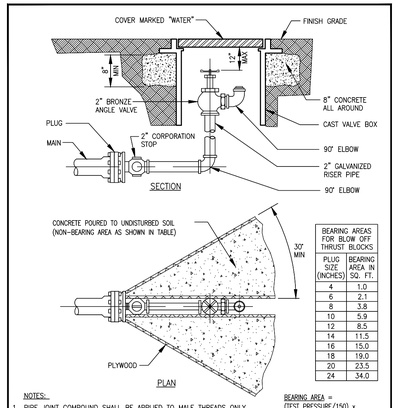

BEARING AREAS FOR BLOW OFF THRUST BLOCKS	
PLUG SIZE (INCHES)	BEARING AREA IN SQ. FT.
4	1.0
6	2.1
8	3.8
10	5.9
12	8.5
14	11.5
16	15.0
18	19.0
20	23.5
24	34.0

BEARING AREA = (TEST PRESSURE/150) x (2000/SOIL BEARING STRESS) x (TABLE VALUE)

NOTES:

1. PIPE JOINT COMPOUND SHALL BE APPLIED TO MALE THREADS ONLY.
2. COAT ALL EXPOSED THREADS WITH BITUMASTIC BEFORE BACKFILLING.
3. 2" TOP IN BOTTOM OF PLUG.
4. PLYWOOD AND CONCRETE TO HAVE A HEIGHT EQUAL TO THE DIAMETER OF THE PIPE.

CITY OF COCONUT CREEK
UTILITIES AND ENGINEERING DEPARTMENT

BLOW OFF VALVE DETAIL

Date	Revisions	Appr. by	Date: Nov. 1999	Scale: N.T.S.	Dwg: F117	Fig: 117

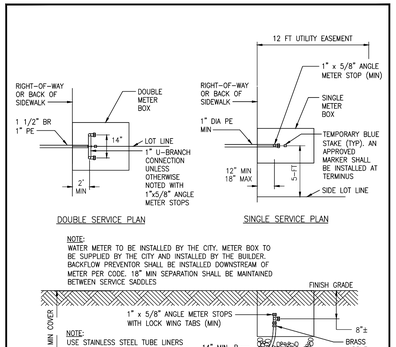

NOTE:

WATER METER TO BE INSTALLED BY THE CITY. METER BOX TO BE SUPPLIED BY THE CITY AND INSTALLED BY THE BUILDER. BACKFLOW PREVENTOR SHALL BE INSTALLED DOWNSTREAM OF METER PER CODE. 18" MIN SEPARATION SHALL BE MAINTAINED BETWEEN SERVICE SADDLES

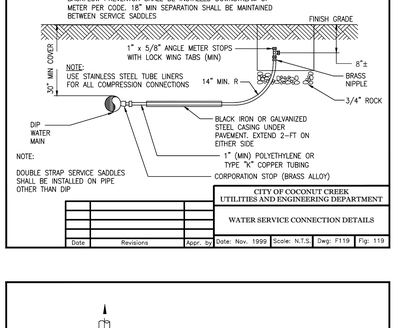

NOTE:

USE STAINLESS STEEL TUBE LINERS FOR ALL COMPRESSION CONNECTIONS

NOTE:

DOUBLE STRAP SERVICE SADDLES SHALL BE INSTALLED ON PIPE OTHER THAN DIP

CITY OF COCONUT CREEK
UTILITIES AND ENGINEERING DEPARTMENT

WATER SERVICE CONNECTION DETAILS

Date	Revisions	Appr. by	Date: Nov. 1999	Scale: N.T.S.	Dwg: F119	Fig: 119

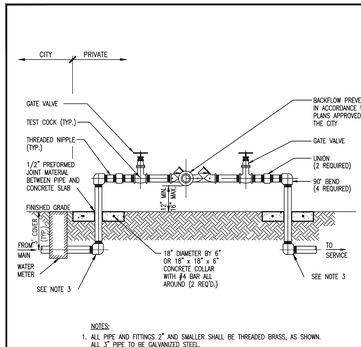

NOTES:

1. ALL PIPE AND FITTINGS 2" AND SMALLER SHALL BE THREADED BRASS, AS SHOWN. ALL 2" PIPE TO BE GALVANIZED STEEL.
2. ALL PIPE FITTINGS LARGER THAN 4" SHALL BE CEMENT-LINED DUCTILE IRON WITH FLANGED FITTINGS FOR ABOVEGROUND USE. MECHANICAL JOINT FITTINGS SHALL BE USED UNDERGROUND WITH RESTRAINED JOINTS AND THRUST COLLARS.
3. MEGALUGS, OR EQUAL, CAN BE USED IN PLACE OF RESTRAINED JOINTS ON ALL UNDERGROUND DUCTILE IRON PIPING (4" AND LARGER).
4. PAINT ALL ABOVEGROUND DUCTILE PIPING, FITTINGS AND VALVES.

CITY OF COCONUT CREEK
UTILITIES AND ENGINEERING DEPARTMENT

REDUCED PRESSURE BACKFLOW PREVENTER

Date	Revisions	Appr. by	Date: Nov. 1999	Scale: N.T.S.	Dwg: F120	Fig: 120

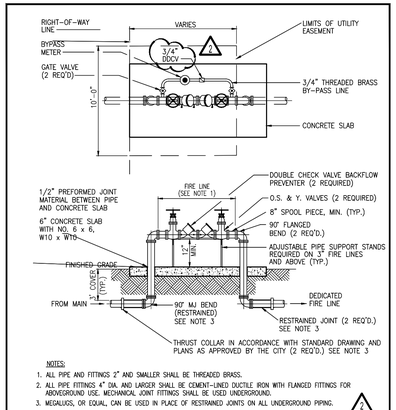

NOTES:

1. ALL PIPE AND FITTINGS 2" AND SMALLER SHALL BE THREADED BRASS.
2. ALL PIPE FITTINGS 4" DIA. AND LARGER SHALL BE CEMENT-LINED DUCTILE IRON WITH FLANGED FITTINGS FOR ABOVEGROUND USE. MECHANICAL JOINT FITTINGS SHALL BE USED UNDERGROUND.
3. MEGALUGS, OR EQUAL, CAN BE USED IN PLACE OF RESTRAINED JOINTS ON ALL UNDERGROUND PIPING.
4. PAINT ALL ABOVEGROUND DUCTILE PIPING, FITTINGS AND VALVES.
5. CONTRACTOR TO ENSURE THAT THE BY-PASS LINE HAS A BACKFLOW PREVENTION DEVICE TO PREVENT BACKFLOW OF CONTAMINANTS INTO THE WATER SYSTEM. THE BACKFLOW PREVENTOR FOLLOWING THE BY-PASS LINE METER SHALL BE THE SAME TYPE DEVICE (DEGREE OF HAZARD) AS THE FIRE MAIN DEVICE.

CITY OF COCONUT CREEK
UTILITIES AND ENGINEERING DEPARTMENT

FIRELINE DOUBLE DETECTOR CHECK VALVE ASSEMBLY

Date	Revisions	Appr. by	Date: Nov. 1999	Scale: N.T.S.	Dwg: F121	Fig: 121

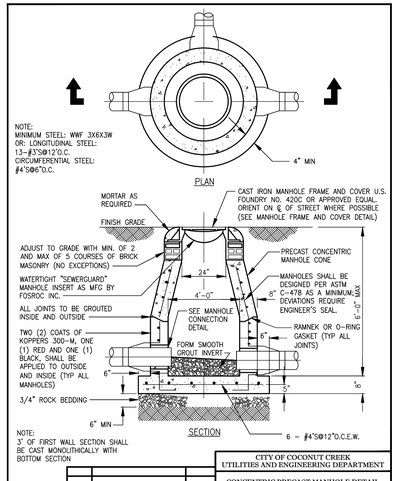

NOTE:

3' OF FIRST WALL SECTION SHALL BE CAST MONOLITHICALLY WITH BOTTOM SECTION

CITY OF COCONUT CREEK
UTILITIES AND ENGINEERING DEPARTMENT

CONCENTRIC PRECAST MANHOLE DETAIL (6'-0" AND UNDER)

Date	Revisions	Appr. by	Date: Nov. 1999	Scale: N.T.S.	Dwg: F200	Fig: 200

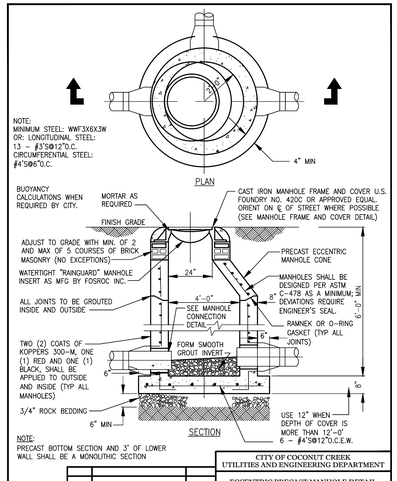

NOTE:

PRECAST BOTTOM SECTION AND 3' OF LOWER WALL SHALL BE A MONOLITHIC SECTION

CITY OF COCONUT CREEK
UTILITIES AND ENGINEERING DEPARTMENT

ECCENTRIC PRECAST MANHOLE DETAIL (6'-0" DEPTH AND GREATER)

Date	Revisions	Appr. by	Date: Nov. 1999	Scale: N.T.S.	Dwg: F200A	Fig: 200A

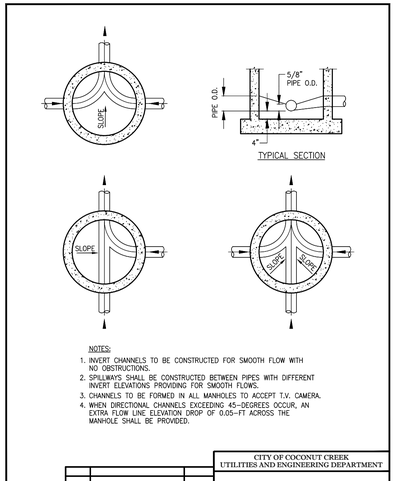

NOTES:

1. INVERT CHANNELS TO BE CONSTRUCTED FOR SMOOTH FLOW WITH NO OBSTRUCTIONS.
2. SPILLWAYS SHALL BE CONSTRUCTED BETWEEN PIPES WITH DIFFERENT INVERT ELEVATIONS PROVIDING FOR SMOOTH FLOWS.
3. CHANNELS TO BE FORMED IN ALL MANHOLES TO ACCEPT T.V. CAMERA.
4. WHEN DIRECTIONAL CHANNELS EXCEEDING 45-DEGREES OCCUR, AN EXTRA FLOW LINE ELEVATION DROP OF 0.05-FT ACROSS THE MANHOLE SHALL BE PROVIDED.

CITY OF COCONUT CREEK
UTILITIES AND ENGINEERING DEPARTMENT

MANHOLE FLOW CHANNEL DETAIL

Date	Revisions	Appr. by	Date: Dec. 1999	Scale: N.T.S.	Dwg: F200B	Fig: 200B

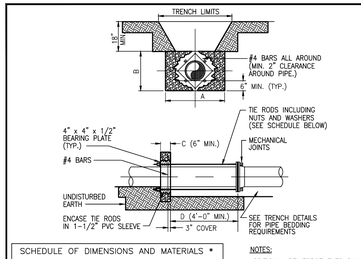

SCHEDULE OF DIMENSIONS AND MATERIALS *

PIPE SIZE (INCHES)	DIMENSIONS				TIE RODS REQ'D	
	A	B	C	D	DIA.	NO.

NOTE: THRUST BLOCK AREAS TO BE COMPUTED ON BASIS OF LBS. PER SQ. FT. SOIL RESTRAINT BEARING. (1,500 MIN) SEE NOTE 3

* TO BE COMPLETED BY ENGINEER.

NOTES:

1. ADDITIONAL REINFORCEMENTS SHALL BE AS SPECIFIED BY THE ENGINEER.
2. MINIMUM COMPRESSIVE STRENGTH FOR CONCRETE SHALL BE 2500 PSI.
3. BEDDING, BACKFILL, AND COMPACTION SHALL BE AS SPECIFIED ELSEWHERE IN THE STANDARD DRAWINGS.
4. ALL FORM BOARDS SHALL BE REMOVED PRIOR TO BACKFILL.
5. NO ALLOWANCE SHALL BE MADE FOR FRICTION BETWEEN THE PIPE WALL AND THE THRUST COLLAR.
6. DESIGN PRESSURE:_____ P.S.I.*

CITY OF COCONUT CREEK
UTILITIES AND ENGINEERING DEPARTMENT

WATER MAIN THRUST COLLAR DETAIL

Date	Revisions	Appr. by	Date: Nov. 1999	Scale: N.T.S.	Dwg: F109	Fig: 109

THOMAS ENGINEERING GROUP
CIVIL ENGINEERS - PROJECT MANAGERS - LAND PLANNING - LANDSCAPE ARCHITECTS
1000 CORPORATE DR. SUITE 250 FORT LAUDERDALE, FL 33334 P: 954-202-7000
4950 W. KENNEDY BLVD. SUITE 600 TAMPA, FL 33609 P: 813-370-4100
125 W INDIANTOWN RD. SUITE 206 JUPITER, FL 33458 P: 561-203-7503

THE INFORMATION, DESIGN, AND CONTENT OF THIS DRAWING ARE PROPRIETARY AND SHALL NOT BE COPIED OR USED FOR ANY PURPOSE WITHOUT PRIOR WRITTEN AUTHORIZATION FROM THOMAS ENGINEERING GROUP, LLC. ONLY APPROVED, SIGNED AND SEALED PLANS SHALL BE UTILIZED FOR CONSTRUCTION PURPOSES.

REVISIONS:

REV:	DATE:	COMMENT:	BY:

811 KNOW WHAT'S BELOW ALWAYS CALL 811 BEFORE YOU DIG
It's fast. It's free. It's the law.
www.callsunshine.com

SITE ENTITLEMENTS

PROJECT No.:	F140188
DRAWN BY:	AAM
CHECKED BY:	MAT
DATE:	07/28/15 (TYP.)
CAD I.D.:	F140188 - UTILITY DETAILS

PROJECT:

SHELL / DAILY'S C-STORE No. 1810

FOR

FIRST COAST ENERGY

CITY OF COCONUT CREEK
FLORIDA

THOMAS ENGINEERING GROUP
RADICE III
1000 CORPORATE DRIVE, SUITE 250
FORT LAUDERDALE, FL 33334
PH: (954) 202-7000
FX: (954) 202-7070
www.ThomasEngineeringGroup.com

MICHAEL A. TROXELL
PROFESSIONAL ENGINEER
June 6, 2017
FLORIDA LICENSE No. 50572
FLORIDA BUSINESS CERT. OF AUTH. No. 27528

SHEET TITLE:

WATER, SEWER & UTILITIES DETAILS

SHEET NUMBER:

C-09

Printed on Tuesday, June 06, 2017, 4:19 PM by Kristin DiPierro