A CORPORATION STOP SHALL BE INSTALLED WITH A LENGTH OF COPPER TUBING EXTENDING ABOVE THE GROUND.THE TUBING SHALL BE INSTALLED WITH A 180° BEND AND A VALVE.

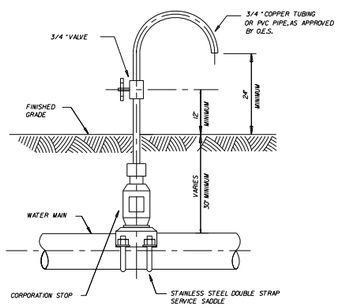

NOTES:
SAMPLING POINTS SHALL BE LOCATED AND LATER REMOVED AS REQUIRED BY BROWARD COUNTY HEALTH DEPARTMENT. CORPORATION STOP SHALL BE REMOVED AND SADDLE PLUGGED WITH A BRASS FITTING.

CITY OF COCONUT CREEK
UTILITIES AND ENGINEERING DEPARTMENT

BACTERIOLOGICAL DETAIL

Date	Revisions	Appr. by	Date: Nov. 1999	Scale: N.T.S.	Dwg: F106	Fig: 106

MINIMUM LENGTH (FT) TO BE RESTRAINED ON EACH SIDE OF FITTING(S).*

	PIPE SIZE								
	6"	8"	10"	12"	16"	20"	24"	30"	36"
90° BEND									
45° BEND									
22-1/2° BEND									
11-1/4° BEND									
PLUG OR BRANCH OF TEE									

* SEE NOTE 7.

NOTES:
1. FITTINGS SHALL BE RESTRAINED JOINTS UNLESS OTHERWISE INDICATED.
2. INSTALL FULL LENGTH JOINTS WITH TOTAL LENGTH EQUAL TO OR GREATER THAN SHOWN IN THE TABLE.
3. WHERE TWO OR MORE FITTINGS ARE TOGETHER,USE FITTING WHICH YIELDS GREATEST LENGTH OF RESTRAINED PIPE.
4. IN LINE VALVES AND THROUGH RUN OF TEES OUTSIDE LIMITS OF RESTRAINED JOINTS FROM OTHER FITTINGS NEED NOT BE RESTRAINED UNLESS OTHERWISE INDICATED.
5. LENGTHS SHOWN IN THE TABLE HAVE BEEN CALCULATED IN ACCORDANCE WITH THE PROCEDURE OUTLINED IN "THRUST RESTRAINT DESIGN FOR DUCTILE IRON PIPE" AS PUBLISHED BY DIPRA,WITH THE FOLLOWING ASSUMPTIONS:

   WORKING PRESSURE:_____ P.S.I.*
   SOIL DESIGNATION:_____ *
   LAYING CONDITIONS:_____ *

6. FOR PIPE ENCASED IN POLYETHYLENE,USE VALUES GIVEN IN PARENTHESES OR INCREASE THE GIVEN VALUE BY A FACTOR OF 1.5.
7. TO BE COMPLETED BY THE DESIGN ENGINEER.

CITY OF COCONUT CREEK
UTILITIES AND ENGINEERING DEPARTMENT

RESTRAINED PIPE DETAIL

Date	Revisions	Appr. by	Date: Nov. 1999	Scale: N.T.S.	Dwg: F108	Fig: 108

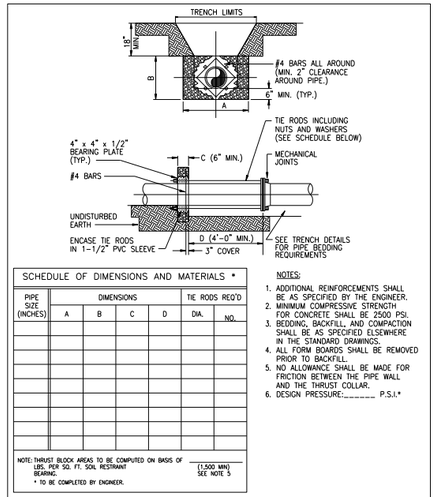

SCHEDULE OF DIMENSIONS AND MATERIALS *

PIPE SIZE (INCHES)	DIMENSIONS				TIE RODS REQ'D	
	A	B	C	D	DIA.	NO.

NOTE: THRUST BLOCK AREAS TO BE COMPUTED ON BASIS OF _____ LBS. PER SQ. FT. SOIL RESTRAINT BEARING. (1,500 MIN) SEE NOTE 5
* TO BE COMPLETED BY ENGINEER.

NOTES:
1. ADDITIONAL REINFORCEMENTS SHALL BE AS SPECIFIED BY THE ENGINEER.
2. MINIMUM COMPRESSIVE STRENGTH FOR CONCRETE SHALL BE 2500 PSI.
3. BEDDING, BACKFILL, AND COMPACTION SHALL BE AS SPECIFIED ELSEWHERE IN THE STANDARD DRAWINGS.
4. ALL FORM BOARDS SHALL BE REMOVED PRIOR TO BACKFILL.
5. NO ALLOWANCE SHALL BE MADE FOR FRICTION BETWEEN THE PIPE WALL AND THE THRUST COLLAR.
6. DESIGN PRESSURE:_____ P.S.I.*

CITY OF COCONUT CREEK
UTILITIES AND ENGINEERING DEPARTMENT

WATER MAIN
THRUST COLLAR DETAIL

Date	Revisions	Appr. by	Date: Nov 1999	Scale: N.T.S.	Dwg: F109	Fig: 109

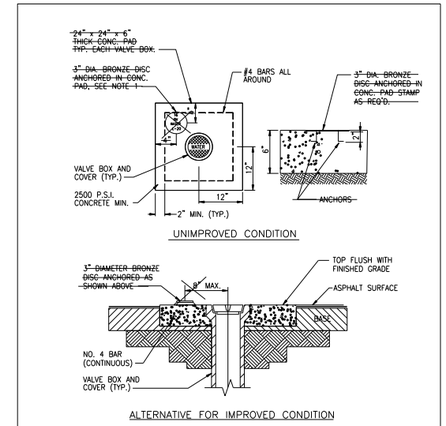

NOTES:
1. ~~BRONZE DISC TO BE SUPPLIED BY CITY.~~
2. ~~AMERICAN~~ FLOW CONTROL TRENCH ADAPTER VALVE BOX AND EXTENSION IS PREFERRED. STANDARD CAST IRON BOX

CITY OF COCONUT CREEK
UTILITIES AND ENGINEERING DEPARTMENT

VALVE COLLAR DETAIL

Date	Revisions	Appr. by	Date: Nov. 1999	Scale: N.T.S.	Dwg: F111	Fig: 111
April 2006	Removed bronze disc - other					

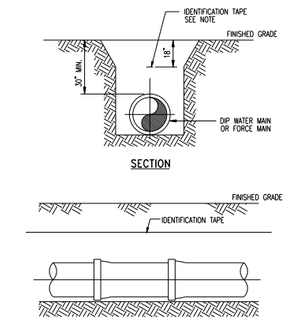

NOTE:
DETECTABLE IDENTIFICATION TAPE SHALL BE INSTALLED DIRECTLY OVER CENTERLINE OF THE PIPE AT 18-INCHES BELOW FINISHED GRADE.

CITY OF COCONUT CREEK
UTILITIES DEPARTMENT

LOCATING TAPE DETAIL

Date	Revisions	Appr. by	Date: Nov. 1999	Scale: N.T.S.	Dwg: F112	Fig: 112

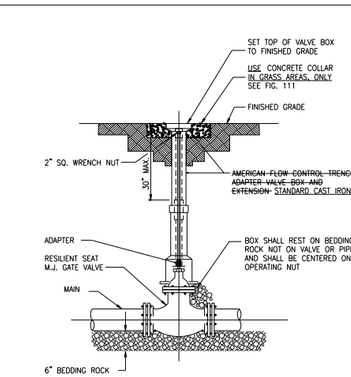

NOTES:
WHEN VALVE IS NOT LOCATED IN PAVEMENT, PLACE A WHITE PAVEMENT REFLECTOR MARKER IN THE DRIVE LANE, ADJACENT TO THE VALVE.

CITY OF COCONUT CREEK
UTILITIES AND ENGINEERING DEPARTMENT

GATE VALVE AND BOX DETAIL

Date	Revisions	Appr. by	Date: Nov. 1999	Scale: N.T.S.	Dwg: F115	Fig: 115
April 2006	Adopted Cast Iron Box - Other					

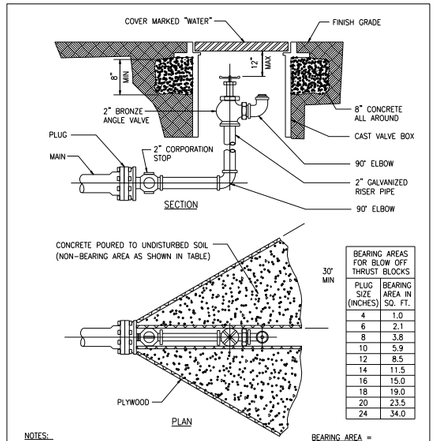

BEARING AREAS FOR BLOW OFF THRUST BLOCKS	
PLUG SIZE (INCHES)	BEARING AREA IN SQ. FT.
4	1.0
6	2.1
8	3.8
10	5.9
12	8.5
14	11.5
16	15.0
18	19.0
20	23.5
24	34.0

NOTES:
1. PIPE JOINT COMPOUND SHALL BE APPLIED TO MALE THREADS ONLY.
2. COAT ALL EXPOSED THREADS WITH BITUMASTIC BEFORE BACKFILLING.
3. 2" TOP IN BOTTOM OF PLUG.
4. PLYWOOD AND CONCRETE TO HAVE A HEIGHT EQUAL TO THE DIAMETER OF THE PIPE.

BEARING AREA = (TEST PRESSURE/150) x (2000/SOIL BEARING STRESS) x (TABLE VALUE)

CITY OF COCONUT CREEK
UTILITIES AND ENGINEERING DEPARTMENT

BLOW OFF VALVE DETAIL

Date	Revisions	Appr. by	Date: Nov. 1999	Scale: N.T.S.	Dwg: F117	Fig: 117

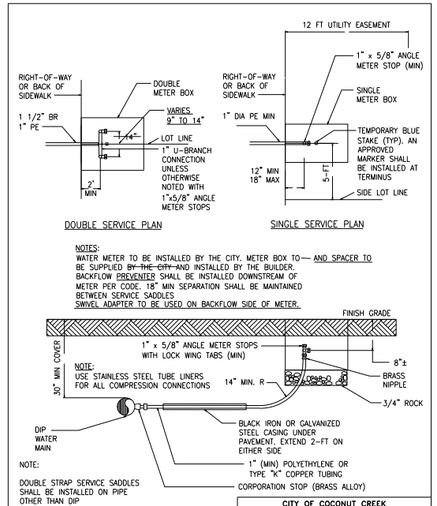

NOTES:
WATER METER TO BE INSTALLED BY THE CITY. METER BOX TO BE SUPPLIED ~~BY THE CITY~~ AND INSTALLED BY THE BUILDER. BACKFLOW PREVENTER SHALL BE INSTALLED DOWNSTREAM OF METER PER CODE. 18" MIN SEPARATION SHALL BE MAINTAINED BETWEEN SERVICE SADDLES AND SPACER TO SWIVEL ADAPTER TO BE USED ON BACKFLOW SIDE OF METER.

NOTE:
USE STAINLESS STEEL TUBE LINERS FOR ALL COMPRESSION CONNECTIONS

NOTE:
DOUBLE STRAP SERVICE SADDLES SHALL BE INSTALLED ON PIPE OTHER THAN DIP

CITY OF COCONUT CREEK
UTILITIES AND ENGINEERING DEPARTMENT

WATER SERVICE CONNECTION DETAILS

Date	Revisions	Appr. by	Date: Nov. 1999	Scale: N.T.S.	Dwg: F119	Fig: 119
April 2006	Modified notes regarding meter box					

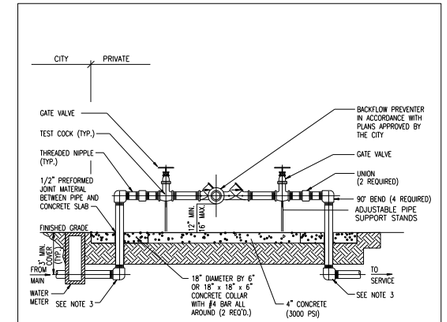

NOTES:
1. ALL PIPE AND FITTINGS 2" AND SMALLER SHALL BE THREADED BRASS, AS SHOWN. ALL 3" PIPE TO BE GALVANIZED STEEL.
2. ALL PIPE FITTINGS LARGER THAN 4" SHALL BE CEMENT-LINED DUCTILE IRON WITH FLANGED FITTINGS FOR ABOVEGROUND USE. MECHANICAL JOINT FITTINGS SHALL BE USED UNDERGROUND WITH RESTRAINED JOINTS AND THRUST COLLARS.
3. MEGALUGS, OR EQUAL, CAN BE USED IN PLACE OF RESTRAINED JOINTS ON ALL UNDERGROUND DUCTILE IRON PIPING (4" AND LARGER).
4. PAINT ALL ABOVEGROUND DUCTILE PIPING, FITTINGS AND VALVES.
5. BACKFLOW DEVICES MUST BE IN PLACE AND OPERATIONAL PRIOR TO THE INSTALLATION OF WATER METERS.

CITY OF COCONUT CREEK
UTILITIES AND ENGINEERING DEPARTMENT

REDUCED PRESSURE BACKFLOW PREVENTER

Date	Revisions	Appr. by	Date: Nov. 1999	Scale: N.T.S.	Dwg: F120	Fig: 120
April 2006	Added note no. 5 - other					

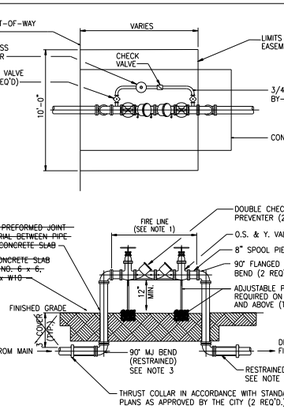

NOTES:
1. ALL PIPE AND FITTINGS 2" AND SMALLER SHALL BE THREADED BRASS.
2. ALL PIPE FITTINGS 4" DIA. AND LARGER SHALL BE CEMENT-LINED DUCTILE IRON WITH FLANGED FITTINGS FOR ABOVEGROUND USE. MECHANICAL JOINT FITTINGS SHALL BE USED UNDERGROUND.
3. MEGALUGS, OR EQUAL, CAN BE USED IN PLACE OF RESTRAINED JOINTS ON ALL UNDERGROUND PIPING.
4. PAINT ALL ABOVEGROUND DUCTILE PIPING, FITTINGS AND VALVES.

CITY OF COCONUT CREEK
UTILITIES AND ENGINEERING DEPARTMENT

FIRELINE DOUBLE DETECTOR CHECK VALVE ASSEMBLY

Date	Revisions	Appr. by	Date: Nov. 1999	Scale: N.T.S.	Dwg: F121	Fig: 121
April 2006	Revised concrete slab under supports					

NO.	DATE	BY	REVISION

Designed by: CITY Date: 4/08
Drawn by: CITY Date: 4/08
Checked by: CITY Date: 4/08

Approved by: ANTONIO QUEVEDO
Date: 10/21/2010
Registered Engineer Number 59471
State of Florida

HSQ GROUP, INC.
Consulting Engineers • Planners • Transportation
1489 West Palmetto Park Road, Suite 340
Boca Raton, Florida 33486 (561) 392-0221
Authorization Number 26258

BEL LAGO
WATER AND SEWER DETAILS

PROJECT NUMBER 0906-14
SHEET NUMBER 14 of 18

Z:\Projects\2009\0906-14 Bel Lago\Drawings\Construction Plans\0906-14-WS0001.dgn 10/21/2010