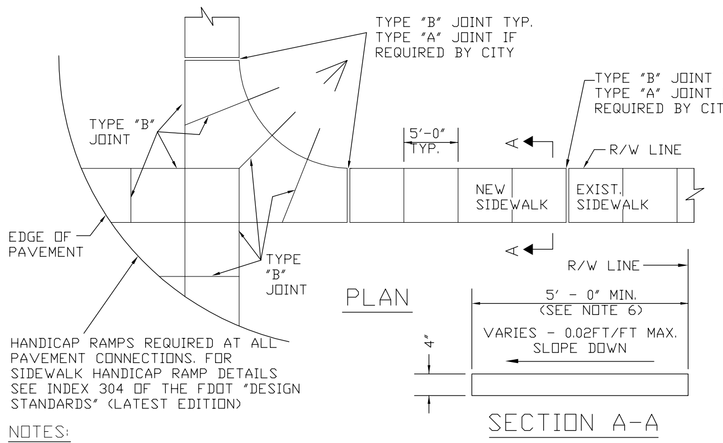

PLAN

SECTION A-A

NOTES:

1. FOR NEW SIDEWALK LOCATIONS SUBGRADE BELOW SIDEWALK SHALL BE A MIN. L.B.R.-40 COMPACTED TO 98% OF MAX. DENSITY PER A.A.S.H.T.O. T-180.
2. CONCRETE TO BE 3,000 P.S.I.@ 28 DAYS
3. ALL JOINTS AND EDGES OF NEW SIDEWALK SHALL BE TOOLED. NO SAWCUT JOINTS ARE PERMITTED IN NEW SIDEWALK.
4. THE USE OF WIRE MESH REINFORCEMENT IN SIDEWALK WILL NOT BE PERMITTED
5. SIDEWALK SLOPES SHALL MEET THE REQUIREMENTS OF THE "AMERICAN WITH DISABILITIES ACT". CROSS SLOPES SHALL NOT EXCEED 0.02'/FT (2.0%).
6. ALL SIDEWALKS SHALL BE 4" THICK EXCEPT AT DRIVEWAY CROSSINGS AND OTHER VEHICULAR CROSSING AREAS WHERE THE SIDEWALK SHALL BE A MINIMUM OF 6" THICK.
7. MINIMUM WIDTH OF SIDEWALK PLACED AT BACK OF CURB IS 6'-0".
8. FOR TYPE "A" EXPANSION JOINTS PRE-MOULDED EXPANSION MATERIAL IS NOT PERMITTED. EXPANSION JOINTS TO BE USED ONLY IF APPROVED BY THE ENGINEERING DIVISION AND SHALL BE SEALED WITH APPROVED FLEXIBLE RUBBERIZED CAULK.
9. SIDEWALKS SHALL HAVE A LIGHT BROOM FINISH.

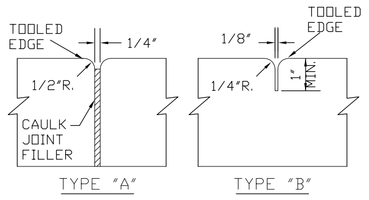

SIDEWALK JOINTS

TABLE OF SIDEWALK JOINTS	
TYPE	LOCATION
"A"	ONLY WHERE DIRECTED BY THE CITY
"B"	5'-0" MINIMUM CENTER TO CENTER ON SIDEWALK

SIDEWALK CONSTRUCTION DETAIL

N.T.S.

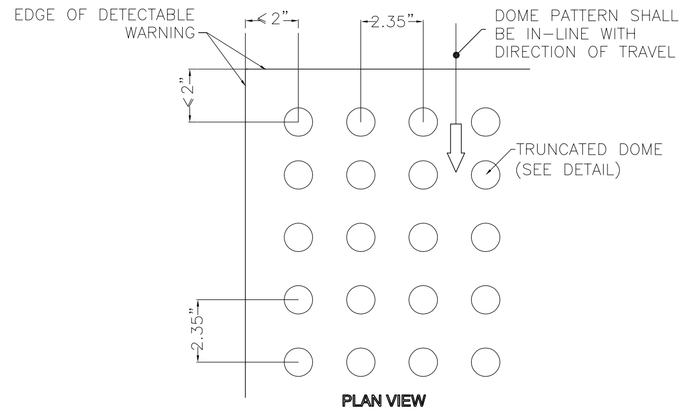

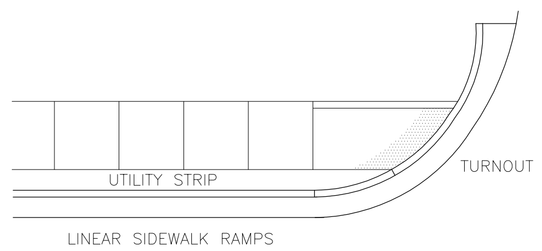

LINEAR SIDEWALK RAMPS

ALL SIDEWALK CURB RAMPS SHALL HAVE DETECTABLE WARNING SURFACES THAT EXTENDS THE FULL WIDTH OF THE RAMP AND THE DIRECTION OF TRAVEL 36 INCHES FROM THE BACK OF CURB, PER BROWARD COUNTY BUILDING CODE.

CURB RAMP DETECTABLE WARNING

N.T.S.

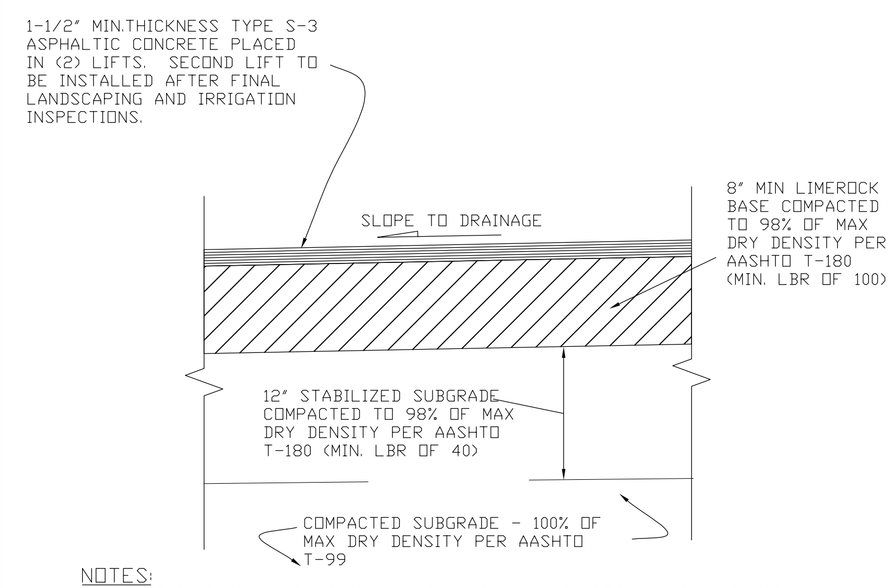

NOTES:

1. STABILIZED SUBGRADE SHALL HAVE A MINIMUM LIMEROCK BEARING RATIO (LBR) OF 40 AND IS REQUIRED FOR ALL NEW PAVEMENT CONSTRUCTION. ALL STABILIZED SUBGRADE SHALL BE STRING LINED FOR GRADE AND PASS ALL REQUIRED DENSITY TESTING PRIOR TO PLACEMENT OF LIMEROCK BASE.
2. LIMEROCK BASE FOR PARKING LOTS SHALL BE A MINIMUM OF 70% CARBONATES OF CALCIUM AND MAGNESIUM.
3. PRIME COAT SHALL BE APPLIED TO ALL FINISHED LIMEROCK BASE SURFACES AFTER BOARDING AND DENSITY INSPECTIONS. APPLICATION RATES AND MATERIALS SHALL BE IN ACCORDANCE WITH FDOT SPECIFICATIONS.
4. TACK COAT SHALL BE PLACED BETWEEN SURFACE LIFTS. APPLICATION RATES AND MATERIALS SHALL BE IN ACCORDANCE WITH FDOT SPECIFICATIONS.
5. THE FINAL PAVEMENT LIFT SHOULD NOT BE PLACED UNTIL ALL PROJECT LANDSCAPING IS IN PLACE AND THE IRRIGATION SYSTEM IS FINALED.

ASPHALTIC CONRETE PAVEMENT DETAIL

N.T.S.

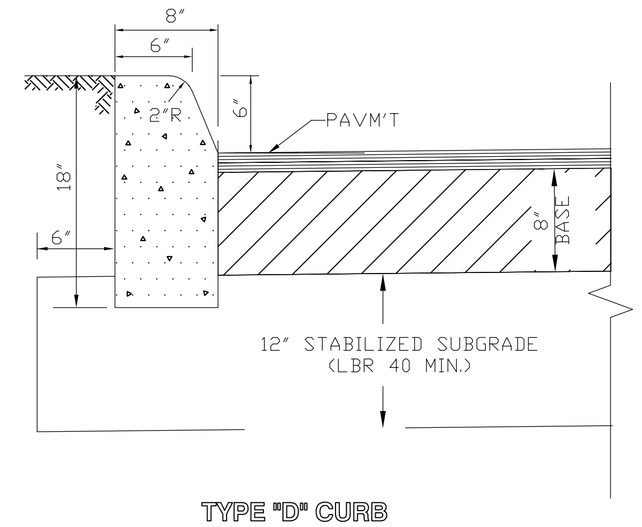

TYPE "D" CURB

N.T.S.

CURB NOTES:

1. PROVIDE 1/4" WIDE CONTRACTION JOINT A MINIMUM OF 1-1/2" DEEP AND AT 10' SPACING MAXIMUM FOR ALL CURBS.
2. CONCRETE SHALL BE 3000 P.S.I. MIN. @ 28 DAYS.
3. TYPE "D" CURB FOR PARKING LOTS MAY BE INSTALLED AS "TRENCHED" D CURB WITH EXTRUDED TOP AT THE CONTRACTOR'S OPTION. TRENCHED CURB REQUIRES CITY TRENCH INSPECTION AND APPROVAL. EXTRUDED CURB MUST BE PLACED WITHIN 15 MINUTES OF PLACEMENT OF TRENCH CONCRETE. EXTRUDED CURB AND TRENCH CONCRETE SHALL BE MONOLITHIC.

TYPE "D" CURB DETAILS

N.T.S.

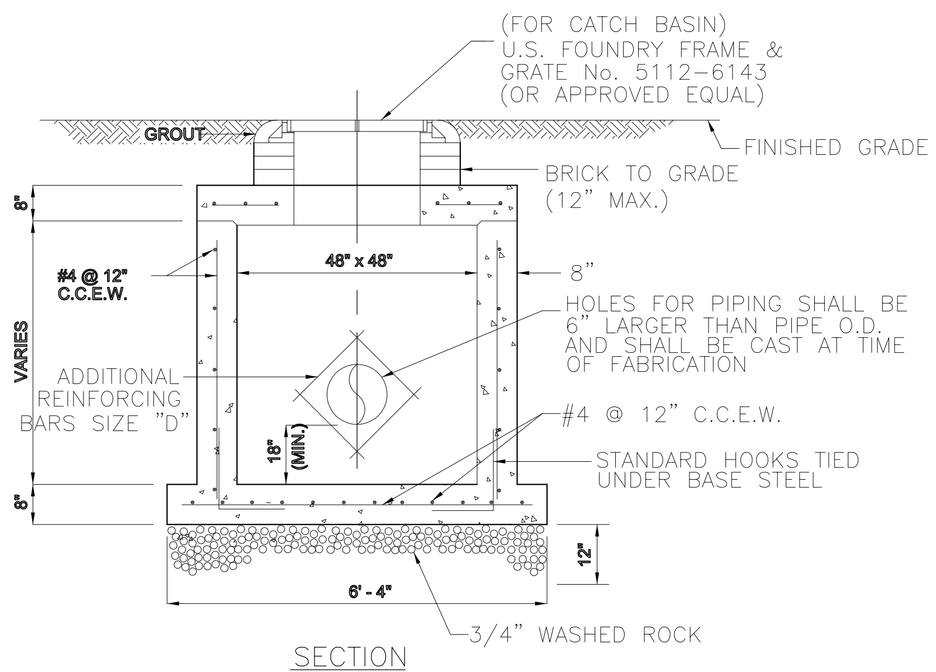

SECTION

PRECAST DRAINAGE CATCH BASIN

N.T.S.

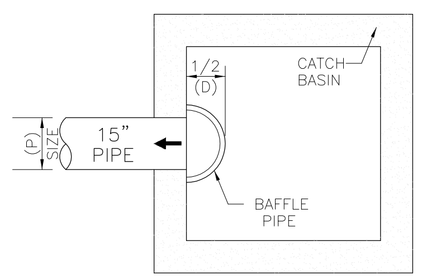

PLAN VIEW

NOTE:
INSTALL BAFFLE WITH TOP PLATE 3" ABOVE TOP OF OUTFALL PIPE AND BOTTOM OF BAFFLE PIPE 6" BELOW INV. OF OUTFALL PIPE.

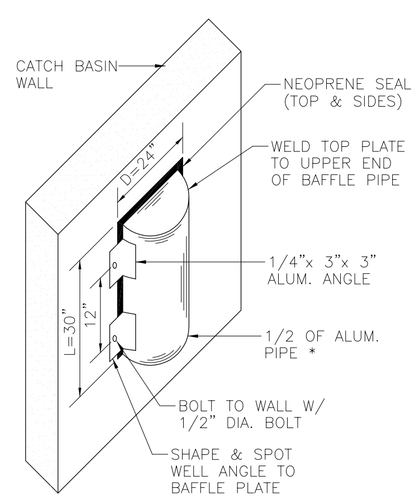

POLLUTION RETARDENT BAFFLE (PRB)

N.T.S.

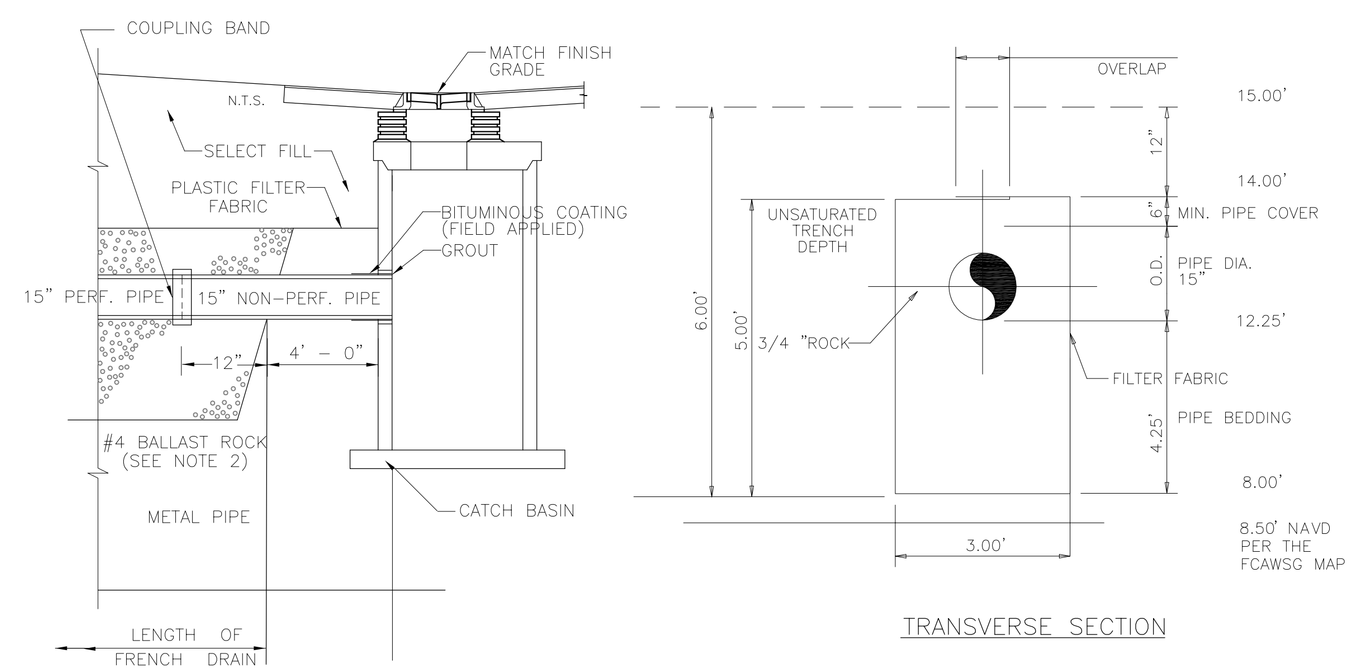

LONGITUDE SECTION

TRANSVERSE SECTION

NOTES:

1. FILTER FABRIC PER F.D.O.T. STD. INDEX # 285 SHALL BE USED AT EACH SIDE AND ON TOP, AND AT EACH END OF FRENCH DRAIN TRENCH.
2. AFTER THE BALLAST ROCK HAS BEEN PLACED TO THE PROPER ELEVATION IT SHALL BE CAREFULLY VIBRATED OR COMPACTED IN ORDER TO ALLOW FOR INITIAL SETTLEMENT THAT MAY OCCUR. IF IT DOES TAKE PLACE, ADDITIONAL BALLAST ROCK WILL BE ADDED TO RESTORE THE BALLAST ROCK TO THE PROPER ELEVATION SO THAT THE EXFILTRATION TRENCH CAN BE COMPLETED IN ACCORDANCE WITH THE DETAIL.

EXFILTRATION TRENCH DETAIL

N.T.S.

GATOR ENGINEERING ASSOCIATES, INC.
11390 TEMPLE STREET
COOPER CITY, FL 33330
TEL: (954) 434-5805 FAX: (954) 434-5804
CERTIFICATE OF AUTHORIZATION NUMBER 30230

SEAL

Digitally signed by Regina Bobo-Jackson Date: 2020.05.14 09:57:00 -05'0'

DATE:
REGINA BOBO-JACKSON, P.E.
FL P.E. NO. 39550

REVISIONS

No.	DATE	DESCRIPTION

PROPOSED BALLROOM FOR:
VISTA GARDENS
5011 W HILLSBORO BLVD.
COCONUT CREEK, FL

GEA PROJECT NO.: 19012
DATE: 03-20-2019
SCALE: AS SHOWN
DESIGNED BY: R.B.J.
DRAWN BY: L.B.
CHECKED BY: R.B.J.
APPROVED BY: R.B.J.

SHEET TITLE

SITE DETAILS

C4 OF 9