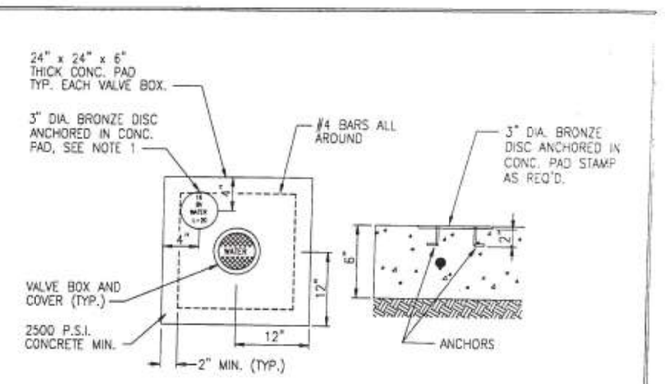

UNIMPROVED CONDITION

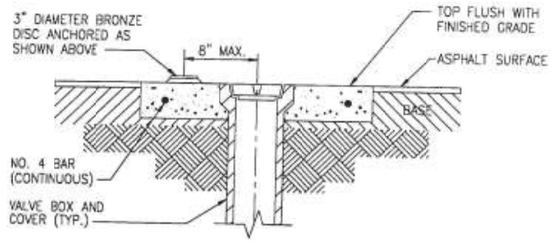

ALTERNATIVE FOR IMPROVED CONDTITION

NOTES:

1. BRONZE DISC TO BE SUPPLIED BY CITY.
2. AMERCAN FLOW CONTROL TRENCH ADAPTER VALVE BOX AND EXTENSION IS PREFERRED.

Date	Revisions	Appr. by	CITY OF COCONUT CREEK UTILITIES AND ENGINEERING DEPARTMENT			
			VALVE COLLAR DETAIL			
			Date: Nov. 1999	Scale: N.T.S.	Dwg: F111	Fig: 111

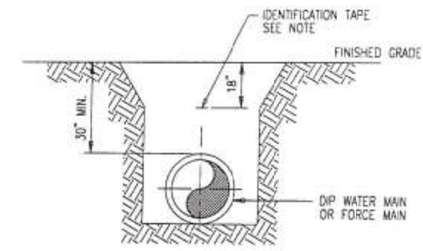

SECTION

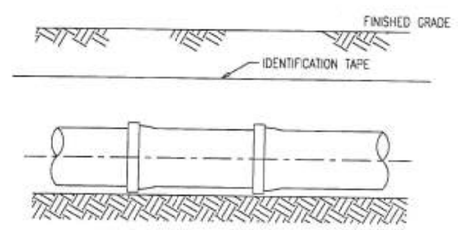

PROFILE

NOTE:

DETECTABLE IDENTIFICATION TAPE SHALL BE INSTALLED DIRECTLY OVER CENTERLINE OF THE PIPE AT 18-INCHES BELOW FINISHED GRADE.

Date	Revisions	Appr. by	CITY OF COCONUT CREEK UTILITIES DEPARTMENT			
			LOCATING TAPE DETAIL			
			Date: Nov. 1999	Scale: N.T.S.	Dwg: F112	Fig: 112

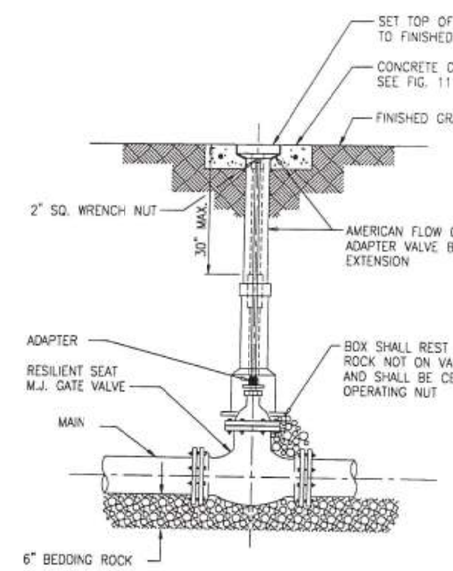

NOTES:

WHEN VALVE IS NOT LOCATED IN PAVEMENT, PLACE A WHITE PAVEMENT REFLECTOR MARKER IN THE DRIVE LANE, ADJACENT TO THE VALVE.

Date	Revisions	Appr. by	CITY OF COCONUT CREEK UTILITIES AND ENGINEERING DEPARTMENT			
			GATE VALVE AND BOX DETAIL			
			Date: Nov. 1999	Scale: N.T.S.	Dwg: F115	Fig: 115

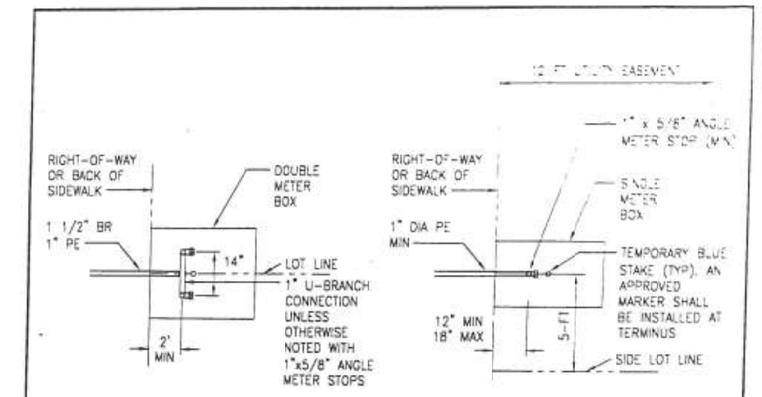

DOUBLE SERVICE PLAN

SINGLE SERVICE PLAN

NOTE:
WATER METER TO BE INSTALLED BY THE CITY. METER BOX TO BE SUPPLIED BY THE CITY AND INSTALLED BY THE BUILDER. BACKFLOW PREVENTOR SHALL BE INSTALLED DOWNSTREAM OF METER PER CODE. 18" MIN SEPARATION SHALL BE MAINTAINED BETWEEN SERVICE SADDLES

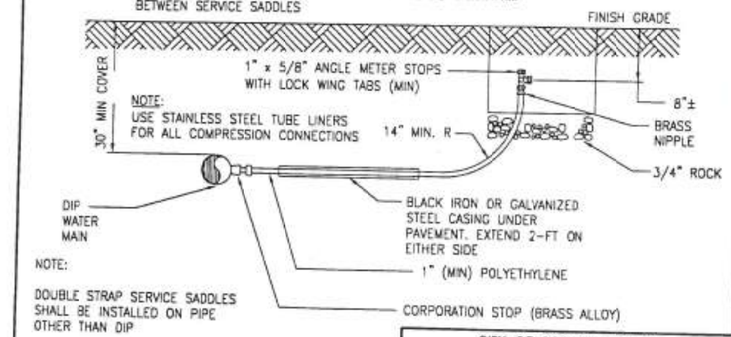

NOTE:

DOUBLE STRAP SERVICE SADDLES SHALL BE INSTALLED ON PIPE OTHER THAN DIP

Date	Revisions	Appr. by	CITY OF COCONUT CREEK UTILITIES AND ENGINEERING DEPARTMENT			
			WATER SERVICE CONNECTION DETAILS			
			Date: Nov. 1999	Scale: N.T.S.	Dwg: F119	Fig: 119

GATOR ENGINEERING ASSOCIATES, INC.
11390 TEMPLE STREET
COOPER CITY, FL 33330
TEL: (954) 434-5805 FAX: (954) 434-5804
CERTIFICATE OF AUTHORIZATION NUMBER 30230

SEAL

DATE:
REGINA BOBO-JACKSON, P.E.
FL P.E. NO.: 39550

PROPOSED BALLROOM FOR:
VISTA GARDENS
5011 W HILLSBORO BLVD.
COCONUT CREEK, FL

REVISIONS

No.	DATE	DESCRIPTION

GEA PROJECT NO.: 19012
DATE: 03-20-2019
SCALE: AS SHOWN
DESIGNED BY: R.B.J.
DRAWN BY: L.B.
CHECKED BY: R.B.J.
APPROVED BY: R.B.J.

SHEET TITLE

DETAILS

C7 OF 9