FINAL CONSTRUCTION PLANS
FOR
LEDER HILLSBORO

4191 W. HILLSBORO BOULEVARD
COCONUT CREEK, FL 33073

LOCATION MAP

SECTION 05, TOWNSHIP 48 S, RANGE 42 E
FOLIO NUMBER 4842 05 24 0010

INDEX OF SHEETS		
Sheet Sequence No.	Sheet Identification	Sheet Title
-	GI-000	COVER
1	GI-001	LEGEND
2	GI-002	CONSTRUCTION SPECIFICATIONS
3	GI-003	GENERAL NOTES
4 - 5	CG-101 - CG-102	STORM WATER POLLUTION PREVENTION PLANS
6 - 7	CG-501 - CG-502	STORM WATER POLLUTION PREVENTION DETAILS
8 - 9	CD-101 - CD-102	DEMOLITION PLANS
10 - 11	CP-101 - CP-102	PAVING, GRADING AND DRAINAGE PLANS
12 - 15	CP-501 - CP-504	PAVING, GRADING AND DRAINAGE DETAILS
16 - 17	CU-101 - CU-102	WATER AND SEWER PLANS
18 - 21	CU-501 - CU-504	WATER AND SEWER DETAILS
22 - 23	CM-101 - CM-102	PAVEMENT MARKING AND SIGNAGE PLANS
24	CM-501	CITY PAVEMENT MARKING AND SIGNAGE DETAILS
25 - 26	CM-502 - CM-503	PAVEMENT MARKING AND SIGNAGE DETAILS
27	CT-501	MAINTENANCE OF TRAFFIC

FEMA FLOOD ZONE:

THE PROPERTY IS LOCATED WITHIN FLOOD ZONES AE (16), X AND "0.2 PERCENT ANNUAL CHANCE FLOOD HAZARD" AS SHOWN ON F.I.R.M. No. 12011C0158H, BEARING A MAP EFFECTIVE DATE OF 08/18/2014.

RELATIONSHIP BETWEEN
NGVD 1929 AND NAVD 1988

ELEV.	DIFFERENCE	DATUM
1.55'	+1.55 FEET	NGVD 1929
0.00'		NAVD 1988

ALL ELEVATIONS SHOWN ON THESE PLANS
ARE BASED ON NAVD 1988 DATUM

LAND DESCRIPTION:

ALL OF PARCEL "A", "LEDER HILLSBORO COMPANY LIMITED - PART 2", ACCORDING TO THE PLAT THEREOF, AS RECORDED IN PLAT BOOK 166, PAGE 43, OF THE PUBLIC RECORDS OF BROWARD COUNTY, FLORIDA.

TOGETHER WITH:

ALL OF TRACT "A", "LEDER HILLSBORO COMPANY LIMITED - PART 1", ACCORDING TO THE PLAT THEREOF, AS RECORDED IN PLAT BOOK 125, PAGE 31, OF THE PUBLIC RECORDS OF BROWARD COUNTY, FLORIDA

SAID LANDS LYING IN THE CITY OF COCONUT CREEK, BROWARD COUNTY, FLORIDA.

THE PUBLIC ROADWAY(S) INDICATED IN THESE PLANS HAVE BEEN DESIGNED IN ACCORDANCE WITH THE "MANUAL OF UNIFORM MINIMUM STANDARDS FOR DESIGN, CONSTRUCTION AND MAINTENANCE FOR STREETS & HIGHWAYS - STATE OF FLORIDA.

THESE PLANS MAY HAVE BEEN REDUCED IN SIZE BY REPRODUCTION. THIS MUST BE CONSIDERED WHEN OBTAINING SCALED DATA.

811 KNOW WHAT'S BELOW ALWAYS CALL 811 BEFORE YOU DIG
It's fast. It's free. It's the law.
www.callsunshine.com

PREPARED FOR:
THE LEDER GROUP
4755 TECHNOLOGY WAY, SUITE 203
BOCA RATON, FL 33431

BROWARD COUNTY HIGHWAY CONSTRUCTION AND ENGINEERING DIVISION

☐ PLAT CONSISTENT WITH PLAT REQUIREMENTS PUBLIC R/W
☐ PUBLIC RIGHT OF WAY APPROVAL FOR PAVING, GRADING AND DRAINAGE

BY:_____ DATE:_____

DOES NOT INCLUDE APPROVAL OF PAVEMENT MARKINGS & SIGNS

KEITH
301 East Atlantic Boulevard
Pompano Beach, Florida 33060-6643
(954) 788-3400
State of Florida Certificate of Authorization Number - 7928

PROJECT No. 09675.00 DATE: 03/28/2017

STEPHEN D. WILLIAMS, P.E.
FLORIDA REG. NO. 32090
(FOR THE FIRM)

General Symbols

Existing	Proposed	Description
℄ ℄	℄ ℄	Centerline & Baseline of Survey or Construction
		Building Access (ADA)
		Building Access (NON-ADA)
A-1 24' WIDE	A-1 24' WIDE	Driveway Turnout Identification (Per FDOT Index 515) w/ Drive Width
CR-A	CR-A	Sidewalk Curb Ramp (Per FDOT Index 304)
	25	Proposed Section Marker
		Flag Pole
		GPS Point
		Hay Bales
		Mail Box
5.00	5.00	Major Contour Elevation
5.20	5.20	Minor Contour Elevation
		Parking Meter
		Property Line
10.98	14.48	Grade Elevation
	14.98 / 14.48	Top Of Curb Elevation/Pavement Elevation
		Soil Test Boring Hole
B.M. NO. 112	B.M. NO. 112	Survey Bench Mark
Line Types		
Existing	**Proposed**	**Description**
		County Bound
		Demolition Line
		Easement Line
		Property Line
		Limited Access Line/Non-Vehicular Access
		Railroad
		Right Of Way
		Canal Or Drainage Ditch
		Shore Line
		Tree Line
C_X	C	Aerial Communication Line
C_X	C	Underground Communication Line
SD_X	SD	Underground Storm Drain Line (Double Line 24" And Over
SS_X	SS	Underground Sanitary Line
E_X	E	Aerial Electric Line
E_X	E	Underground Electric
W_X	W	Underground Water Line
FM_X	FM	Underground Force Main
12"	12"	Gate
X X	X X	Chain Link Fence
		Wood Fence
X X	X X	Metal Rail Fence
SF	SF	Silt Fence
		Staked Turbidity Barrier
		Turbidity Barrier
		Guard Rail
		Roadway Centerline
		2 - 4 Skip
		3 - 9 Skip
		6- 10 Skip
		10 - 30 Skip
		10 - 10 - 20 Skip
		Curb
		Curb And Gutter

Landscaping

Existing	Proposed	Description
		Bush
		Tree
		Palm Tree

Paving and Grading

Existing	Proposed	Description
		Flow Directional Arrow
		Pavement Marking Arrows
		Stop Bar
		Concrete Sidewalk
		Jogging Path
		Pavement Area
		Existing Pavement/Concrete/ Landscape Removal Area
		Milling And Resurfacing
		Detectable Warning (Truncated Domes) Per Florida Accessibility Code
		Soil Tracking Prevention Device

Drainage / Utilities

Existing	Proposed	Description
CB	CB	Catch Basin
		Yard Drain
CB	CB	Exfiltration Trench
CB	CB	Catch Basin With Filter Fabric Insert
		Curb Type 5
		Curb Type 6
		Pipe Culvert - Mitered End Section
		Pipe Culvert - Straight Endwall
		Pipe Culvert - U - Type Endwall
C E G D S	C E G D S	Manhole - Communication, Electric, Gas, Drn, San Sew
GAS SEW SW WTR NPW	GAS SEW SW WTR NPW	Valve Box - Gas, San. Sew, Water, Non-Potable Water
		22.5 degree Bend
		45 degree Bend
		90 degree Bend
		Utility Crossing
		Fire Hydrant
		Proposed Bacteriological Sampling Point
PS #	PS #	Pump Station
GT	GT	Grease Trap
ST	ST	Septic Tank
DW	DW	Drainage Well
MW	MW	Monitoring Well
		Water Well
CO	CO	Sanitary Sewer Cleanout
BFP (NNN)	BFP (NNN)	Back Flow Preventor
J	J	Junction Box
E	E	Electric Handhole
ELEC	ELEC	Electric Meter
W	W	Water Meter
		Gate Valve
		Guy wire
		Light Pole
		Relocated Or Adjusted Light Pole
		Wood Power Pole
		Concrete Utility Pole
		Traffic Signal Pole (Concrete, Wood, Metal)
		Pedestrian Signal Head (Pole Or Pedestal Mounted)
		Post Mounted Sign
		Street Sign
		High Mast Lighting Tower
		Controller Cabinet (Base Mounted)
		Controller Cabinet (Pole Mounted)
		Traffic Signal Head (Span Wire Mounted)
		Traffic Signal Head (Pedestal Mounted)
		Traffic Signal Head (Mast Arm Mounted)
	N: 623025.4322	Coordinate values shown on proposed improvements are relative to the coordinate values indicated on the Right-of-Way, property corners or reference monument
	E: 850262.1786	

Abbreviations

General	
AADT	Annual Average Daily Traffic
ABAN	Abandon
ADJ	Adjust
APPROX.	Approximate
A.C.	Asphalt Concrete
ACCM PIPE	Asphalt Coated Corrugated Metal Pipe
BIT.	Bituminous
BC	Back Of Curb
BD.	Bound
BL	Baseline
BLDG	Building
BM	Benchmark
BO	By Others
BOS	Bottom Of Slope
BR.	Bridge
CAP	Corrugated Aluminum Pipe
CB	Catch Basin
CBCI	Catch Basin With Curb Inlet
CC	Cement Concrete
CCM	Cement Concrete Masonry
CEM	Cement
CI	Curb Inlet
CIP	Cast Iron Pipe
CLF	Chain Link Fence
CL	Centerline
CMP	Corrugated Metal Pipe
CO.	County
CONC	Concrete
CONT	Continuous
CONST	Construction
CR GR	Crown Grade
DHV	Design Hourly Volume
DI	Drop Inlet
DIA	Diameter
DIP	Ductile Iron Pipe
DWY	Driveway
ELEV (OR EL.)	Elevation
EMB	Embankment
EOP	Edge Of Pavement
EXIST (OR EX)	Existing
EXC	Excavation
F&C	Frame And Cover
F&G	Frame And Grate
FDN.	Foundation
FLDSTN	Fieldstone
GAR	Garage
GD	Ground
GI	Gutter Inlet
GIP	Galvanized Iron Pipe
GRAN	Granite
GRAV	Gravel
GRD	Guard
GV	Gate Valve
HDW	Headwall
HMA	Hot Mix Asphalt
HOR	Horizontal
HYD	Hydrant
INV	Invert
JCT	Junction
L	Length Of Curve
LB	Leach Basin
LP	Light Pole
LT	Left
MAX	Maximum
MB	Mailbox
MH	Manhole
MIN	Minimum
NIC	Not In Contract
NO.	Number
PC	Point Of Curvature
PCC	Point Of Compound Curvature
P.G.L.	Profile Grade Line

Abbreviations Continued

PI	Point Of Intersection
POC	Point On Curve
POT	Point On Tangent
PRC	Point Of Reverse Curvature
PROJ	Project
PROP	Proposed
PT	Point Of Tangency
PVC	Point Of Vertical Curvature
PVI	Point Of Vertical Intersection
PVT	Point Of Vertical Tangency
PVMT	Pavement
PWW	Paved Water Way
R	Radius Of Curvature
R&D	Remove And Dispose
RCP	Reinforced Concrete Pipe
RD	Road
RDWY	Roadway
REM	Remove
RET	Retain
RET WALL	Retaining Wall
ROW	Right Of Way
RR	Railroad
R&R	Remove And Reset
RT	Right
SHLD	Shoulder
SMH	Sewer Manhole
ST	Street
STA	Station
SSD	Stopping Sight Distance
SW	Sidewalk
T	Tangent Distance Of Curve/Truck %
TAN	Tangent
TEMP	Temporary
TC	Top Of Curb
TOS	Top Of Slope
TS&V	TAPPING SLEEVE & TAPPING VALVE
TYP	Typical
UP	Utility Pole
VAR	Varies
VERT	Vertical
VC	Vertical Curve
WCR	Wheel Chair Ramp
WIP	Wrought Iron Pipe
WM	Water Meter/Water Main
X-SECT	Cross Section

KEITH
Corporate Office
301 East Atlantic Boulevard
Pompano Beach, Florida 33060-6643
(954) 788-3400

Miami-Dade County
2160 NW 82 Avenue
Doral, Forida 33122

Palm Beach County
120 N Federal Highway, Suite 208
Lake Worth, Florida 33460

Orange County
2948 E Livingston Street
Orlando, Florida 32803

State of Florida Certificate of Authorization Number - 7928

BID / CONTRACT NO. :

REVISIONS

NO.	DESCRIPTION	DATE
1	PER DRC COMMENTS	6/8/2017
2	PER DRC COMMENTS	8/24/17

LEDER HILLSBORO STORAGE

SCALE:	AS NOTED
DATE ISSUED:	JANUARY 31, 2018
DRAWN BY:	MG
DESIGNED BY:	MG
CHECKED BY:	SW

STEPHEN D. WILLIAMS, P.E.
FLORIDA REG. NO. 32090
(FOR THE FIRM)

SHEET TITLE

LEGEND

SHEET NUMBER

GI-001

SHEET 01 of 27

PROJECT NO. 09675.00

Drawing name: N:\09\09675.00 - Pet Lodge - Leder Group\Engineering\Cad\09675.00-GI-001X.dwg Layout Name: GI-001 Legend Plotted by: MGrimbaldi Plotted on: Jun 20, 2018 - 8:02am

CONSTRUCTION SPECIFICATIONS

Section 20 - General Specifications Paving Grading Drainage and Earthwork

20.General

20.1. It is the intent of these specifications to describe the minimum acceptable technical requirements for the materials and workmanship for construction of site improvements for this project. Such improvements may generally include, but not to be limited to, clearing, grading, paving, removal of existing pavement storm drainage, water lines and sanitary sewers.

20.2. It is the intent that the Florida Department of Transportation (FDOT) "Standard Specifications for Road and Bridge Construction: (current edition) together with "Supplemental Specifications to the Standard Specifications for Road and Bridge Construction" (current edition), and the FDOT Roadway and Traffic Design Standards (current edition) be used where applicable for the various work, and that where such wording therein refers to the State of Florida and its Department of Transportation and personnel, such wording is intended to be replaced with the wording which would provide proper terminology; thereby making such "Standard Specifications for Road and Bridge Construction" together with the "FDOT Roadway and Traffic Design Standards" as the "Standard Specifications" for this project. If within a particular section, another section, article or paragraph is referred to, it shall be part of the Standard Specifications also. The Contractor shall abide by all local and State laws, regulations and building codes which have jurisdiction in the area.

20.3. The Contractor shall furnish all labor, materials and equipment and perform all operations required to complete the construction of a paving and drainage system as shown on the plans, specified herein, or both. It is the intent to provide a complete and operating facility in accordance with these specifications and the construction drawings. The material and equipment shown or specified shall not be taken to exclude any other incidentals necessary to complete the work.

20.4. All labor, materials, and methods of construction shall be in strict accordance with the plans and construction specifications and the minimum engineering and construction standards adopted by the unit of government which has jurisdiction and responsibility for the construction. Where conflicts or omissions exist, the jurisdictional government Engineering Department's standards shall govern. Substitutions and deviations from plans and specifications shall be permitted only when written approval has been issued by the Engineer.

20.5. Guarantee - all materials and equipment to be furnished and/or installed by the Contractor under this contract, shall be guaranteed for a period of (l) one year from the date of final acceptance thereof, against defective materials, design and workmanship. Upon receipt of notice from the owner of failure of any part of the guaranteed equipment or materials, during the guarantee period, the affected part or materials shall be replaced promptly with new parts or materials by the contractor, at no expense to the owner. In the event the Contractor fails to make necessary replacement or repairs within (7) seven days after notification by the owner, the owner may accomplish the work at the expense of the contractor.

21.Earthwork

21.1. All areas within the project limits shall be cleared and grubbed prior to construction. This shall consist of the complete removal and disposal of all trees, brush, stumps, roots, grass, weeds, rubbish and all other obstructions resting on or protruding through the surface of the existing ground to a depth of 1'. All work shall be in accordance with section 110 of the Standard Specifications.

21.2. None of the existing limerock material from demolished pavement is to be incorporated in the new limerock base, unless noted in plans. The existing limerock material from demolished pavement may be incorporated into the stabilized subgrade / subbase, or stabilized shoulder.

21.3. Fill material shall be classified as A-l, A-3, or A-2-4 in accordance with AASHTO N--145 and shall be free from vegetation and organic material. Not more than 12% by weight of fill material shall pass the no. 200 sieve.

21.4. All fill material in areas not to be paved shall be compacted to 95% of the maximum density as determined by AASHTO T-99.

21.5. All material of construction shall be subject to inspection and testing to establish conformance with the specifications and suitably for the uses intended. The Contractor shall notify the Engineer at least 24 hours prior to the time he will be ready for an inspection or test. The Contractor shall follow City and County inspection procedures. The Contractor shall not proceed with any phase of work dependent on an inspection or test of an earlier phase of work, prior to that test or inspection passing. The Contractor shall be responsible for providing certified material test results to the Engineer of record prior to the release of final certification by the Engineer. Test results must include, but may not be limited to, densities for subgrade and limerock, utilities, excavation, asphalt gradation reports, concrete cylinders, etc.

21.6. When encountered, muck shall be completely removed from the center line (10) ten feet beyond the edge of pavement each side. All such material shall be replaced by approved granular fill.

21.7. When encountered within drainage swales, hardpan shall be removed to full depth for a width of (5) five feet at the invert and replaced with granular materials.

21.8. All underground utilities and drainage installations shall be in place prior to subgrade compaction and pavement construction.

21.9. Ground adjacent to roadway/pavement having runoff shall be graded (2) two inches lower than the edge of pavement to allow for the placement of sod.

21.10.Site grading elevations shall be within 0.1' of the required elevation for non paved areas and all areas shall be graded to drain without ponding.

21.11.The Contractor shall perform all excavation, fill, embankment and grading to achieve the proposed plan grades including typical road sections, side slopes and canal sections. All work shall be in accordance with section 120 of the Standard Specifications. If fill material is required in excess of that generated by the excavation, the Contractor shall supply this material as required from off-site.

21.12.A 2" blanket of top soil shall be placed over all areas to be sodded or seeded and mulched within the project limits unless otherwise indicated on the plans.

21.13.Sod shall be St. Augustine unless otherwise indicated on the plans, and shall be placed on the graded top soil and watered to insure satisfactory condition upon final acceptance of the project.

22.Drainage

22.1. Inlets - all inlets shall be the type designated on the plans, and shall be constructed in accordance with section 425 of the Standard Specifications. All inlets and pipe shall be protected during construction to prevent siltation in the drainage systems by way of temporary plugs and plywood or plastic covers over the inlets. The entire drainage system shall be cleaned of all debris prior to final acceptance.

22.2. Pipe specifications: the material type is shown on the drawings by one of the following designations:

- RCP = reinforced concrete pipe, ASTM designation C--76, section 941 of the Standard Specifications.
- CMP = corrugated metal (aluminum) pipe, ASTM designation M-196.
- CMP (smooth lined) = corrugated metal aluminum pipe, (smooth lined) ASTM designation M-196.
- SCP = slotted concrete pipe, sections 941 and 942, of the Standard Specifications.
- PVC = polyvinyl chloride pipe.
- PCMP = perforated cmp, section 945, of the Standard Specifications
- Corrugated High Density Polyethylene Pipe (HDPE) (12 Inches to 60 Inches), shall meet the requirements of FDOT Specification section 948-2.3.

22.3. Pipe backfill - requirements for pipe backfill crossing roads or parking areas shall be as defined in the section 125-8, of the Standard Specifications. Pipeline backfill shall be placed in 6 inch lifts and compacted to 100% of the standard proctor (AASHTO T--99 specifications)

22.4. Location of drainage structures shall govern, and pipe length may have to be adjusted to accomplish construction as shown on these plans.

22.5. Distance and lengths shown on plans and profile drawings are referenced to the inner walls of structures.

22.6. Filter fabric shall be Mirafi, Typar or equal conforming to section 985 of the Standard Specifications.

23.Asphalt Paving

23.1. Where new asphalt meets existing asphalt, the existing asphalt shall be saw cut to provide a straight even line. Prior to removing curb or gutter, the adjacent asphalt shall be saw cut to provide a straight even line.

23.2. Internal asphalt paving constructed on existing sandy soils shall be constructed with a 12" subgrade, compacted to a minimum density of 98% maximum density as determined by AASHTO T-180. The compacted subgrade shall be constructed in the limits shown on the plans. All subgrade shall have an LBR of 40 unless otherwise noted. 3

23.3. Asphaltic concrete surface course shall be constructed to the limits shown on the plans. The surface course shall consist of the thickness and type asphaltic concrete as specified in the plans. All asphaltic concrete shall be in accordance with sections 320, 327, 330, 334, 336, 337, 337, 338, 339 and 341 of the Standard Specifications.

23.4. Limerock base shall be prepared, compacted and graded and shall be in accordance with section 200 of the Standard Specifications. All limerock shall be compacted to 98% per AASHTO T-180 and have not less than 70% of carbonates of calcium and magnesium unless otherwise designated. The Engineer shall inspect the completed base course and the Contractor shall correct any deficiencies and clean the base course prior to the placement of the prime coat. A tack coat will also be required if the Engineer finds that the primed base has become excessively dirty or the prime coat has cured to the extent of losing bounding effect prior to placement of the asphaltic concrete surface course. The prime and tack coats shall be in accordance with section 300 of the Standard Specifications.

23.5. Limerock base material shall be placed in maximum 6" lifts. Bases greater than 6" shall be placed in two equal lifts. If, through field tests, the Contractor can demonstrate that the compaction equipment can achieve density for the full depth of a thicker lift, and if approved by the engineer, the base may be constructed in successive courses of not more than 8 inches (200 mm) compacted thickness.

23.6. Asphalt edges that are not curbed shall be saw cut to provide a straight even line to the dimensions shown on plans.

24.Concrete Construction

24.1. Concrete sidewalk shall be in accordance with section 522 of the Standard Specifications and in accordance with F.D.O.T. Roadway and Traffic Design Standards, index no. 310. Concrete sidewalk shall be 4" thick, unless otherwise not and constructed on compacted subgrade, with 1/2" expansion joints placed at a maximum of 75', unless otherwise noted on plans. Crack control joints shall be 5' on center. All concrete sidewalks that cross driveways shall be 6" thick, unless otherwise noted on plans.

24.2. Sidewalk Curb ramps half be in accordance with F.D.O.T. Roadway and Traffic Design Standards, index no. 304.

24.3. Concrete curb shall be constructed to the limits shown on the plans. The concrete shall have a minimum compressive strength of 2500 PSI at 28 days and shall be in accordance with section 520 of the Standard Specifications. Concrete curbing shall be in accordance with F.D.O.T. Roadway and Traffic Design Standards, index no. 300.

24.4.

Section 30 - Water distribution and sanitary sewer force mains.

30. Materials: 3

Note: If materials list here on are in conflict with utility owner, material owner requirements shall govern.

30.1. All water main pipe, including fittings, shall be color coded or marked using blue as a predominant color to differentiate drinking water from reclaimed or other water. Underground plastic pipe shall be solid-wall blue pipe, shall have a co-extruded blue external skin, or shall be white or black pipe with blue stripes incorporated into, or applied to, the pipe wall; and underground metal or concrete pipe shall have blue stripes applied to the pipe wall. Pipe striped during manufacturing of the pipe shall have continuous stripes that run parallel to the axis of the pipe, that are located at no greater than 90-degree intervals around the pipe, and that will remain intact during and after installation of the pipe. If tape or paint is used to stripe pipe during installation of the pipe, the tape or paint shall be applied in a continuous line that runs parallel to the axis of the pipe and that is located along the top of the pipe; for pipes with an internal diameter of 24 inches or greater, tape or paint shall be applied in continuous lines along each side of the pipe as well as along the top of the pipe.

30.2. Ductile iron pipe for water distribution mains shall conform to ANSI/AWWA standard C151/A21.51 latest revision, "ductile iron pipe centrifugally cast in metal molds or sand-lined molds" with a minimum wall thickness of class 51 (pressure class 350) unless otherwise noted in the plans. Ductile iron pipe shall be cement lined and seal coated in accordance with ANSI/AWWA standard C104/A21.4 latest revision. The pipe shall be adapted for use with class 250 fittings for all sizes. Water main shall be colored blue in accordance with Florida State Statutes.

30.3. Ductile iron pipe for sewage force mains shall conform to ANSI/AWWA standard C151/A21.51 latest revision, "ductile iron pipe centrifugally cast in metal molds or sand- lined molds" with a minimum wall thickness of class 51 (pressure class 350) unless otherwise noted in the plans. Ductile iron pipe shall be interior ceramic epoxy lined and exterior coated with the manufacturer's coating system (Protecto 401 ceramic epoxy with a minimum dry film thickness of 40 mils and an outside coating of either coal tar epoxy or asphalt). Cement mortared linings are not appropriate for this application.

30.4. All pipe & fittings on the lift station sites shall be ductile iron conforming to the same specifications as above for sewage force mains except that flanged ductile iron pipe & fittings shall be used inside valve pits and wet wells. Flanged pipe and fittings shall conform to ANSI/AWWA C115/a21.15 latest revision and ANSI/AWWA C110/A21.10 latest revision. The following thickness classes shall be adhered to: 4" - 12" - class 52, 14" & larger - class 51.

30.5. PVC pressure pipe for sizes 4" through 12" and shall conform to ANSI/AWWA standard C900 latest revision. PVC pressure pipe shall be made from class 12454-a or class 12454-b virgin material and conform with the outside diameter of cast iron pipe with a minimum wall thickness of dr series 18. Ultra violet degradation or sun bleached pipe will be cause for rejection. Water main shall be colored blue in accordance with Florida State Statutes. Force main shall be impregnated with green pigment. Reuse main shall be impregnated with purple pigment.

30.6. Ductile iron fittings for water distribution mains shall conform to ANSI/AWWA standard C110/A21.10 latest revision. Fittings 4" and larger shall be cement lined and seal coated in accordance with ANSI/AWWA standard C104/A21.4 latest revision. Water Main fitting shall be colored blue in accordance with Florida state statutes.

30.7. Cast iron and ductile iron fittings for sewage force mains shall conform to ANSI/AWWA standard C110/A21.10 latest revision. Fittings 4" and larger shall be coated in accordance with the requirements of ductile iron pipe for sewage force mains.

30.8. Joints for bell and spigot ductile iron pipe and fittings shall conform to ANSI/AWWA standard C111/A21.11 latest revision. Mechanical joint or push-on joint to be rubber gasket compression-type. Special fittings and joints shall be considered for specific installation subject to the approval of the engineer.

30.9. Joints for PVC pressure pipe shall be bell and spigot push-on rubber gasket type only. No solvent weld or threaded joints will be permitted.

30.10.Water distribution system restraint: all fittings and specific pipe joints shall be restrained as outlined below:

- Joint restraint
- Push-on P.V.C. EBAA iron series 1600
- Push-on DIP EBAA iron series 1700
- tr-flex by U.S. Pipe or
- flex ring by American
- Fittings w/ DIP EBAA iron series 1100 megalug
- Fittings w/ P.V.C. EBAA iron series 2000 megalug
- Length of restrained pipe shall be as indicated on restrained joint pipe detail. (see water & sewer detail sheet)

30.11. Sewage force main system restraint: all fittings and specific pipe joints shall be restrained as outlined below

- Joint restraint
- Push-on P.V.C. EBAA iron series 1600
- Push-on DIP EBAA iron series 1700
- tr-flex by U.S. Pipe or
- flex ring by American
- Fittings w/ DIP EBAA iron series 1100 megalug
- Fittings w/ P.V.C. EBAA iron series 2000 megalug
- Length of restrained pipe shall be as indicated on restrained joint pipe detail. (see water & sewer detail sheet)

30.12.Water distribution valves shall be gate valves, iron body, fully resilient seat bronzed mounted non-rising stem, rated at 200 PSI and conforming to ANSI/AWWA C509 latest revision, and shall have mechanical joints.

30.12.1. Gate valves 4" and larger shall be Mueller A-2360, American 250 line or Clow F-6100, conforming to ANSI/AWWA C500 latest revision or approved equal.

30.12.2. Tapping valves shall be Mueller T-2360 or approved equal.

30.12.3. Gate valves 3" or less shall be Nibco T-133 or T-136 with malleable hand wheels or approved equal.

30.13.Tapping sleeves shall be Mueller H615, Clow F- 2505 or approved equal.

30.14.Valve boxes shall be U.S. foundry 7630 or approved equal painted blue with the designation "water".

30.15.Retainer glands for DIP shall conform to ANSI/AWWA C111/A21.11 latest revision. All glands shall be manufactured from ductile iron as listed by underwriters laboratories for 250 psi minimum water pressure rating. Clow corporation model f-1058, standard fire protection equipment company or approved equal.

30.16.Dresser couplings shall be regular black couplings with plain gaskets for galvanized steel pipe. They shall be dresser style 90. No substitutions allowed.

30.17.Fire hydrants shall be Mueller centurion traffic type A-423 with 5 1/4" internal valve opening or approved equal. Pumper nozzle to be 18" from finished grade. All hydrants to be installed with control valve. Retainer glands are preferred for restraining. Fire hydrant shall comply with ANSI/AWWA C502 latest revision. Fire hydrants shall be painted in accordance with NFPA #291 or per agency standards having jurisdiction. Blue raised reflective pavement marker (rpm) shall be used to identify fire hydrant location. The placement of the rpm to be at the centerline of the outside roadway lane.

30.18.Sewage force main valves shall be plug valves which shall be of the non-lubricated, eccentric type with resilient faced plugs, port areas for valves 20 inches and smaller shall be at least 80% of full pipe area. Port area of valves 24 inches and larger shall be at least 70% of full pipe area. The body shall be of semi-steel (ASTM A-126 C1.b) and shall have bolted bonnet which gives access to the internals of the valve. Seats shall be welded overlay of high nickel content or a stainless steel plate locked in the body cavity. If a plate is used, it shall be replaceable through the bonnet access. Bearings shall be permanently lubricated of stainless steel, bronze or Teflon lined, fiber glass backed Duralon. Bearing areas shall be isolated from the flow with grit seals. Valves shall have packing bonnets where the shaft protrudes from the valve and the packing shall be self-adjusting chevron type which can be replaced without removing the bonnet. All nuts, bolts, springs and washers shall be stainless steel.

30.19.Plug valves shall be designed for a working pressure of 150 PSI the valve and actuator shall be capable of satisfactory operation in either direction of flow against pressure drops up to and including 100 PSI (for plug valves over 12" in diameter). Valves shall be bubble tight in both directions at 100 psi differential. Plug valves over 12" in diameter shall have worm gear operators. The operating mechanism shall be for buried service with a 2 inch square operating nut.

30.20.Plug valves are to be installed with the seat pointed towards the upstream flow, when specified.

30.21.Swing check valves for water, sewage, sludge, and general service shall be of the outside lever and spring or weight type, in accordance with ANSI/AWWA C 508 latest revision swing-check valves for waterworks service, 2" through 24" NPS, unless otherwise indicated, with full-opening passages, designed for a water-working pressure of 150 PSI they shall have a flanged cover piece to provide access to the disc.

30.22.High density polyethylene pipe (HDPE) for water distribution mains shall conform to AWWA C906 standard, latest revision. Pipes shall be color-coded blue, minimum 40 feet standard lengths.

31.Service connection:

31.1. Service saddles shall be fusion bonded plastic coated ductile iron (ASTM A536) with stainless steel straps, saddles shall be double strap type.

31.2. Service lines shall be polyethylene (PE 3408), 200 p.s.i rated, DR9. Pipe joints shall be of the compression type totally confined grip seal and coupling nut.

31.3. Corporation stops shall be manufactured of brass alloy in accordance with ASTM B-62 with threaded ends, as manufactured by Ford ballcorp, catalog # 1100 or approved equal.

31.4. Curb stops shall be Ford v63-44w-x" latest revision or approved equal.

31.5. Meter stops shall be 90 degree lockwing type and shall be of bronze construction in accordance FV63-777W" latest revision with ASTM B-62. Meter stops shall be closed bottom design and resilient "0" ring sealed against external leakage at the top. Stops shall be equipped with a meter coupling nut on the outlet sides, as manufactured by Ford or approved equal.

32. Installation:

32.1. Where restrained pipe joints are required due to fittings, appurtenances, etc., pipe material shall be DIP

32.2. All PVC pipe shall be installed in accordance with the uni-bell plastic pipe association "guide for installation of PVC pressure pipe for municipal water distribution system," and ANSI/AWWA C605-xx latest revision standard.

32.3. All DIP shall be installed in accordance with ANSI/ C600-xx latest revision.

32.4. All water mains shall typically be laid with a minimum 36" cover for PVC and 30" cover for DIP.

32.5. Detector tape shall be laid 18 inches above all water and sewer lines. A 14 gauge multi-strand wire shall be attached to all nonconductive water mains to facilitate location. An extra 4 feet of wire shall be provided at all valves, blow-offs, hydrants, etc. The wire shall be tested for continuity at the pressure test.

32.6. Pipe deflection shall not exceed 50% of the maximum deflection recommended by the manufacturer.

32.7. A continuous and uniform bedding shall be provided. Backfill material shall be placed in accordance with the plans and specifications.

32.8. All valves shall be installed with adjustable cast iron valve boxes with the word "water" or "sewer", as applicable, cast in the cover. U.S. foundry or approved equal.

33.Testing:

33.1. Before any physical connections and acceptance for operation to the existing water mains are made, the complete water system shall be flushed, pressure tested and disinfected. Copies of passing bacteriological results and pressure test results must be submitted to, and approved by, the engineer, utility owner, and health department. Hydrostatic testing of new mains shall be performed at a minimum starting pressure of 150 PSI for two hours in accordance with ANSI/AWWA C600-05 (hydrostatic test). The pressure test shall not vary more than 5 PSI during the test. The allowable leakage during the pressure test shall be less than the number of gallons per hour as determined by the formula:

L = (sd(p)1/2)/148,000.

In which L equals the allowable leakage in gallons per hour. S equals length of pipe (linear feet), d equals nominal diameter of pipe (inches) and p equals the average test pressure (pounds per square inch gauge). Maximum length of test pipe section should be 2000 feet. The water system shall be disinfected in accordance with the ANSI/AWWA C651-05 (water main bacteriological tests).

33.2. The pressure test shall be witnessed by a representative of the utility owner and the engineer of record.

33.3. For water distribution pipes, sampling points shall be provided by the contractor at the locations shown on the plans.

33.4. For water distribution pipes, disinfection and bacteriological testing shall be in accordance with ANSI/AWWA C651-14 (water main bacteriological tests). Maximum distance between sampling points shall be as follows:

- Transmission mains: every 1200 feet
- Branch mains: every 1000 feet
- Isolated mains < 1000 feet: 2 sample points
- Isolated mains > 1000 feet: 3 sample points

Section 40 - Gravity Sanitary Sewer Collection System

40.General:

40.1. Manhole, valve box, meter box and other structure rim elevations within the limits of construction are to be adjusted to conform to plan grades proposed in these plans. If no other individual cost item is included in the contract schedule for a particular structure adjustment.

40.2. Distance and lengths shown on plans and profile drawings are referenced to the center of structures.

41. Materials:

Note: If materials list here on are in conflict with utility owner, material owner requirements shall govern.

41.1. All PVC sewer pipe and fittings shall be non-pressure polyvinyl chloride (PVC) pipe conforming to ASTM D 3034, SDR 26, with push-on rubber gasket joints.

41.2. Ductile iron pipe shall conform to ANSI/AWWA C151/A21.51-xx latest revision, "ductile iron pipe centrifugally cast in metal molds or sand-lined molds" with wall thickness class 51 for 8" and above, class 52 for 4" and 6", unless otherwise directed by the engineer. Ductile iron pipe shall be epoxy lined or coated with the manufacturer's coating system as approved by the engineer of record and the local municipality or utility owner. In either case, the engineer's review and approval is required for either alternative prior to construction. Cement mortared linings are not appropriate for this application.

41.3. All ductile iron fittings shall conform to ANSI/AWWA standard C110/A21.10-xx latest revision. All fittings and accessories shall be epoxy lined and as manufactured or supplied by the pipe manufacturer or approved equal.

41.4. Manholes shall be precast per ASTM C 478 and in accordance with the plans and specifications.

41.5. Manholes are to be sealed with type II sulphate resistant cement or approved equal - no molding plaster.

41.6. Joints for bell and spigot ductile iron pipe and fittings shall conform to ANSI/AWWA standard C111/A21.11-xx latest revision. Mechanical joint or push-on joint to be rubber gasket compression- type.

41.7. PVC clean-outs to have screw type access plug. Long radius wye connections and fittings shall be used in order to access clean-out operations.

41.8. Cleanouts shall be installed at all sewer services exceeding 75' in length (every 75') with a clean out at the property line, easement line, or 5' from a building. The contractor shall coordinate the location of the building cleanout (5' from the building) and elevation of the end of the sewer service with the building plumbing contractor. Cleanouts shall be the same size as the service lateral in which they are installed.

42. Installation:

42.1. PVC sewer pipe shall be laid in accordance with ASTM D 2321 and the Uni-Bell plastic pipe association's "recommended practice for the installation of PVC sewer pipe."

42.2. DIP shall be installed in accordance with ANSI/AWWA C-600-xx latest revision.

42.3. Pipe to manhole connection to be Fernco neoprene boot couplings with stainless steel accessories or approved equal.

42.4. Manholes shall be set plumb to line and grade on firm subgrade providing uniform bearing under the base.

42.5. All openings and joints shall be sealed watertight.

42.6. Two coats of Koppers 300-m, first red, second one black, shall be applied to the inside of all manholes and shall be applied in accordance with the manufacturer's specifications (16 mils per coat). Coating as required by utility owner or engineer shall be applied to the outside of the manhole. The interior coats shall be applied after sewer lamping of lines. After the application of each coat, the utility owner and engineer shall inspect the manholes. The inspection shall be scheduled a minimum of 48 hours prior to inspection.

43.Testing: Testing of gravity sewer mains and laterals shall be in accordance with the utility owner's minimum design and construction standards latest revision.

43.1. After construction of the sewer system, the engineer may require a visual infiltration and/or exfiltration test to be performed on the entire system or any part thereof.

43.2. An air test may be substituted for the water exfiltration test, upon approval of the engineer.

43.3. The allowable limits of sewer pipe leakage for gravity sewer mains shall not exceed 100 gallons per inch of inside pipe diameter per mile per day for any section tested. No visible leakage shall be allowed.

43.4. The installed sewers may require video inspections.

KEITH
Corporate Office
301 East Atlantic Boulevard
Pompano Beach, Florida 33060-6643
(954) 788-3400

Miami-Dade County
2160 NW 82 Avenue
Doral, Forida 33122

Palm Beach County
120 N Federal Highway, Suite 208
Lake Worth, Florida 33460

Orange County
2948 E Livingston Street
Orlando, Florida 32803

State of Florida Certificate of Authorization Number - 7928

BID / CONTRACT NO. :

REVISIONS

NO.	DESCRIPTION	DATE
1	PER DRC COMMENTS	6/8/2017
2	PER DRC COMMENTS	8/24/17
3	PER CITY COMMENTS	12/28/2017

LEDER HILLSBORO STORAGE

SCALE:	AS NOTED
DATE ISSUED:	JANUARY 31, 2018
DRAWN BY:	MG
DESIGNED BY:	MG
CHECKED BY:	SW

STEPHEN D. WILLIAMS, P.E.
FLORIDA REG. NO. 32090
(FOR THE FIRM)

SHEET TITLE

CONSTRUCTION SPECIFICATIONS

SHEET NUMBER

GI-002

PROJECT NO. 09675.00

General Notes

This construction project may or may not include all items covered by these notes and specifications, i.e. paving, grading, drainage lines, water lines, or sanitary sewer lines. See plans for detailed project scope. Notes and specifications on this sheet refer to paving, grading, drainage, water, and sanitary sewer, and are intended for this projects scope of work and for reference purposes for other work items that may be required due to unforeseen existing conditions or required remedial work.

1. Specific Site Notes

1.1. County and "City" in these notes refers to County and City in which project resides.

1.2. State in these notes refers to the State of Florida.

1.3. Existing topographic information in the plans is based on survey data and best available information. See project survey and notes on plan sheets regarding the source of the topographic information.

2. Applicable Codes

2.1. All construction and materials shall conform to the standards and specifications of the city, county, and all other jurisdictional, State and national codes where applicable.

2.2. In the event of a conflict between the general notes and construction specifications in these plans, and the contract documents and specifications in the specification booklet, the contractor shall submit written request for clarification.

2.3. All construction shall be done in a safe manner and in strict compliance with all the requirements of the Federal occupational safety and health act of 1970, and all State and jurisdictional safety and health regulations.

2.4. The contractor shall be required to comply with Federal, State, County, and City laws, codes, and regulations.

2.5. All handicap accessible areas to conform to the requirements of the Americans with Disabilities Act (ADA), State ADA codes, and Florida Building Code ADA codes latest edition.

2.6. Trench safety act

2.6.1. All trench excavation shall be performed in accordance with chapter 90-96 of the laws of Florida (the trench safety act).

2.6.2. All trench excavation in excess of 5 feet in depth shall be undertaken in accordance with O.S.H.A. standard 29 cfr. Section 1926.650 subpart p.

2.6.3. The contractor shall submit with his contract a completed, signed, and notarized copy of the trench safety act compliance statement. The contractor shall also submit a separate cost item identifying the cost of compliance with the applicable trench safety codes.

2.6.4. A trench safety system, if required, shall be designed by the excavation contractor utilizing a specialty engineer as required.

3. Construction Notes:

3.1. Contractor shall tie to existing grade by evenly sloping from closest proposed grade provided to existing grade at limits of construction, unless otherwise noted on the plans. If no limit of work line is indicated, slope to adjacent property line or right-of-way line, as applicable.

3.2. Unless otherwise indicated on the plans, all existing manholes, catch basins, meters and other structures, whether indicated on the plans or not shall be adjusted to match the new grade, by the contractor.

3.3. The curb shall be sloped to accommodate the new pavement, catch basin and grate, and the surface flow pattern.

3.4. The contractor shall use care when cutting the existing asphalt pavement and during excavations, so that the existing catch basins and grates that are to remain will not be damaged.

3.5. The contractor shall maintain the roadway slope when resurfacing the roadway. The edge of pavement shall match the new gutter lip per FDOT index 300.

3.6. The new sidewalk shall be constructed in accordance with the given elevations and at the proper slopes depicted in the specifications, details and standards. Existing driveways and other features shall be matched when possible as directed by the engineer.

3.7. Radii shown are to the edge of pavement.

3.8. All bench mark monuments within the limits of construction shall be protected and referenced by the contractor in the same way as public land corners.

3.9. All excess material is to be disposed by the contractor within 72 hours.

3.10. In areas where the base is exposed by the milling operation, the contractor shall restore the base to its original thickness and structural capacity before paving over such areas. This includes but is not limited to restoring original degree of compaction, moisture content, composition, stability, and intended slope. If paving will not take place the same day the base is exposed and reworked, the base shall be sealed according to the governing standards and specifications. Any additional work resulting from the contractor's failure to protect the exposed base as stated above in order to restore the original structural capacity shall be the contractor's cost.

3.11. The contractor is to maintain existing signage during construction operations, in order to facilitate emergency vehicle traffic.

3.12. The topographic survey included with this set of plans reflects pre-demolition conditions and does not reflect the site conditions after demolition. The contractor is fully and solely responsible in determining the required earthwork for the proposed development of the site. This includes, but is not limited to, any excavation/dredge and fill activities required at any phase of the project. The contractor shall use the final approved (released for construction) plans, surveys, geotechnical reports, and any other available information for determining the amount of excavation/dredging and filling required. Any quantities included in the approved permits were estimated by the engineer for purposes of obtaining the permit and under no circumstances shall be used by the contractor in lieu of performing their own earthwork calculations required for cost estimating and bidding the project.

3.13. The contractor shall be responsible for reading and familiarizing themselves with any and all available geotechnical reports prepared by others and/or any recommendations written or implied by the geotechnical engineer for this project. The geotechnical conditions and recommendations outlined in these reports are in force and in full effect as part of the proposed improvements. The contractor is responsible for ensuring that all the work associated with this project is in compliance with the geotechnical engineer's recommendations. Keith and associates, Inc. is not responsible for the suitability or unsuitability of the soils encountered. It is the contractor's responsibility to ensure that the means and methods of construction used can and will allow for the successful completion of the required site improvements.

3.14. The contractor shall ensure that the available geotechnical information is sufficient for his complete understanding of the soil conditions for the site. If additional geotechnical investigation is required by the contractor, this additional work shall be considered incidental to the contract and no additional compensation shall be allowed.

3.15. The contractor shall be responsible for the repair and restoration of existing pavement, pipes, conduits, sprinkler heads, cables, etc., and landscaped areas damaged as a result of the contractor's operations and/or those of his subcontractors and shall restore at no additional cost.

3.16. The contractor shall not bring any hazardous materials onto the project. Should the contractor require such for performing the contracted work, the contractor shall request, in writing, permission from the owner, city and engineer. The contractor shall provide the owner, city and engineer with a copy of the material safety data sheet (MSDS) for each hazardous material proposed for use. The project engineer shall coordinate with the owner and city prior to issuing written approval to the contractor.

3.17. Any known or suspected hazardous material found on the project by the contractor shall be immediately reported to the city and/or engineer, who shall direct the contractor to protect the area of known or suspected contamination from further access. The city and/or engineer are to notify the owner/engineer of the discovery. The owner/engineer will arrange for investigation, identification, and remediation of the hazardous material. The contractor shall not return to the area of contamination until approval is provided by the engineer.

3.18. The contractor shall contact the appropriate city engineering inspector and engineer 48 hours in advance of the event to notify the city of construction start up, or to schedule all required tests and inspections including final walk-throughs.

4. Preconstruction Responsibilities

4.1. All utility / access easements to be secured prior to construction.

4.2. No construction may commence until the appropriate permits have been obtained from all municipal, State, County, and Federal agencies.

4.3. All required governmental agency building permits to be obtained by the contractor prior to any construction activity.

4.4. Contractor to coordinate construction scheduling for connection to the existing water and sewer lines with the utility department that owns and/or maintains the water and sewer lines.

4.5. Prior to the start of construction, the owner shall submit an NPDES construction general permit (CGP) "notice of intent (N.O.I.) to use Generic Permit for storm water discharge from construction activities form (DEP form 62-621.300(4)(b)) to FDEP notices center. The contractor will be responsible for (1) implementation of the storm water pollution prevention plan (SWPPP) that was required to be developed prior to NOI submittal, and (2) retention of records required by the permit, including retention of a copy of the SWPPP at the construction site from the date of project initiation to the date of final site stabilization. A "notice of termination (N.O.T.) of generic permit coverage" form (DEP form 62-621.300(6)) must be submitted to FDEP to discontinue permit coverage, subsequent to completion of construction. For additional information see FDEP website: http://www.dep.state.fl.us/water/ storm water/npdes.

4.6. Prior to construction or installation, 5 sets of shop drawings shall be submitted for review as required for the following items listed below, but not limited to:

- Drainage: Catch basins, manholes, headwalls, grates/tops, yard drains.
- Water: Fire hydrants, valves, backflow preventer, DDCV, meter box.
- Sewer: Manholes, lift stations (wetwell, hatches, valves, pump data, electrical panel)

4.0.1. Catalogue literature shall be submitted for drainage, water and sewer pipes, fittings, and appurtenances.

4.0.2. Prior to submitting shop drawings to the engineer, the contractor shall review and approve the drawings, and shall note in red any deviations from the engineer's plans or specifications.

4.0.3. Individual shop drawings for all precast structures are required. Catalogue literature will not be accepted for precast structures.

4.1. Contractor to submit maintenance of traffic plan(s) in accordance with FDOT and Broward county requirements, and submit for approval prior to beginning construction.

5. Inspections / Testing:

5.1. The contractor shall notify in writing the owner, the County, the engineer of record, & any other governmental agencies having jurisdiction at least 48 hours prior to beginning construction and prior to required inspections of the following items, where applicable:

- Clearing and earthwork
- Storm drainage systems
- Sanitary sewer systems
- Water distribution systems
- Subgrade
- Limerock base
- Asphalt or concrete pavement
- Sidewalks, concrete flatwork/curbing
- Landscaping
- Pavement marking and signage
- Signalization
- Site lighting
- Electrical and communication lines
- Utility conduits
- Irrigation
- Final

5.1. The owner, engineer, and jurisdictional permitting agencies may make inspections of the work at any time. The contractor shall cooperate fully with all inspections.

5.3. Testing - all testing required by the plans and specifications shall be performed by a licensed / FDOT qualified testing company. Required test for asphalt and limerock shall be taken at the direction of the engineer or the jurisdictional governmental agency in accordance with the plans and specifications.

6. Temporary Facilities

6.1. It shall be the contractor's responsibility to arrange for or supply temporary water service, sanitary facilities, communications, and electricity, for his operations and works, cost included under mobilization.

6.2. Contractor shall construct temporary fencing to secure construction areas at all times, cost included in mobilization.

6.3. Contractor to obtain a secure staging area and obtain all necessary approvals from the owner.

6.4. Contractor shall construct and maintain temporary lighting as required to light the construction project limits at all times, to at least the same lighting intensity levels as the existing conditions.

6.5. The contractor shall maintain access to adjacent properties at all times.

7. Project Progress and Closeout

7.1. During construction, the project site and all adjacent areas shall be maintained in a neat and clean manner, and upon final clean-up, the project site shall be left clear of all surplus material or trash. The paved areas shall be broom swept clean.

7.2. The contractor shall restore or replace any public or private property (such as highway, driveway, walkway, and landscaping), damaged by his work, equipment, or employees, to a condition at least equal to that existing immediately prior to the beginning of construction. Suitable materials and methods shall be used for such restoration.

7.3. Material or debris shall be hauled in accordance with NPDES permit and jurisdictional laws.

7.4. All land survey property monuments or permanent reference markers, removed or destroyed by the contractor during construction shall be restored by a State of Florida registered land surveyor at the contractor's expense.

7.5. All unpaved surfaces disturbed as a result of construction activities shall be graded, sodded, & restored to a condition equal to or better than that which existed before the construction.

8. Project record documents:

8.1. During the daily progress of the job, the contractor shall record on his set of construction drawings the location, length, material and elevation of any facility not built according to plans. This copy of the "as-built" shall be submitted to engineer for project record.

8.2. Upon completion of drainage improvements and limerock base construction (at least 48 hours before placing asphalt pavement) the contractor shall furnish the engineer of record "as-built" plans for these improvements, showing the locations and pertinent grades of all drainage installations and the finished rock grades of the road crown and edges of pavement at 50 foot intervals, including locations and elevations of all high and low points.

8.3. Upon completion of construction, and prior to final acceptance, the contractor shall submit to the engineer of record one complete set of all "as-built" contract drawings. These drawings shall be marked to show "as-built" construction changes, dimensions, locations, and elevations of all improvements.

8.4. "As-built" drawings of water lines and force mains shall include the following information:

8.4.1. Top of pipe elevations every 100 LF.

8.4.2. Locations and elevations of all fittings including bends, tees, gate valves, double detector check valves, fire hydrants, and appurtenances.

8.4.3. All connections to existing lines.

8.4.4. Ends of all water services at the buildings where the water service terminates.

8.5. "As-built" drawings of gravity sanitary sewer lines shall include the following information:

8.5.1. Rim elevations, invert elevations, length of piping between structures, and slopes.

8.5.2. The stub ends and cleanouts of all sewer laterals shall be located horizontally and vertically.

8.6. "As-built" drawings of all drainage lines shall include the following information:

8.6.1. Rim elevation, invert elevation, length of piping between structures, and control structure elevations if applicable.

8.6.2. The size of the lines.

8.6.3. Drainage well structure shall include, but not be limited to, top of casing elevation, top and bottom elevations of the structure and baffle walls, rim elevations and pipe inverts.

8.7. "As-built" drawings of construction areas shall include the following:

8.7.1. Rock elevations at all high, and low points, and at enough intermediate points to confirm slope consistency.

8.7.2. Rock elevations and concrete base elevations shall be taken at all locations where there is a finish grade elevation shown on the design plans.

8.7.3. All catch basin and manhole rim elevations.

8.7.4. Finish grade elevations in island areas.

8.7.5. "As-built" elevations shall be taken on all paved and unpaved swales, at enough intermediate points to confirm slope consistency and conformance to the plan details.

8.7.6. Lake and canal bank "as-built" drawings shall include a key sheet of the lake for the location of cross sections. Lake and canal bank cross sections shall be plotted at a minimum of every 100 lf, unless otherwise specified. "as-built" drawings shall consist of the location and elevation of the top of bank, edge of water, and the deep cut line, with the distance between each shown on the drawing.

8.7.7. Retention area "as-built" elevations shall be taken at the bottom of the retention area and at the top of bank. If there are contours indicated on the design plans, then they shall be included in "as-built" drawings as well.

8.8. Upon completion of the work, the contractor shall prepare "as-built" drawings on full size, 24" x 36" sheets. All "as-built" information shall be put on the latest engineering drawings. Eight (8) sets of blue or black line drawings shall be submitted. These drawings shall be signed and sealed by a Florida registered professional engineer or land surveyor.

8.9. An electronic copy of these "as-built" drawings shall be submitted to the engineer of record in AutoCAD, version 2008 or later.

9. Utility Notes

9.1. Contractor is responsible for utility verification prior to fabrication.

9.2. The contractor is advised that properties adjacent to the project have electric, telephone, gas, water and/or sewer service laterals which may not be shown in plans. The contractor must request the location of these lateral services from the utility companies.

9.3. The contractor shall use hand digging when excavating near existing utilities. Extreme caution shall be exercised by the contractor while excavating, installing, backfilling or compacting around the utilities.

9.4. The contractor shall notify and obtain an underground clearance from all utility companies and governmental agencies at least 48 hours prior to beginning any construction. The contractor shall obtain a Sunshine811.com Certification clearance number and field markings at least 48 hours prior to beginning any excavation.

- Prior to commencement of any excavation, the contractor shall comply with Florida statute 553.851 for the protection of underground gas pipelines.

9.1. For street excavation or closing or for alteration of access to public or private property, the contractor shall notify:

- Roadway jurisdictional engineering / public works authority.
- County transit authority
- School board transportation authority
- Jurisdictional fire department dispatch
- Jurisdictional police department(s)

9.6. The contractor shall use extreme caution working under, over, and around existing electric lines. The contractor shall contact the electric provider company to verify locations, voltage, and required clearances, onsite, in right-of-ways, and in easements, prior to any construction in the vicinity of existing lines.

9.7. Location and size of all existing utilities and topography (facilities) as shown on construction drawings are drawn from available records. The engineer assumes no responsibility for the accuracy of the facilities shown or for any facility not shown. It is the contractor's responsibility to determine the exact location (vertical & horizontal) of any existing utilities and topography prior to construction. The contractor shall verify the elevations and locations of all existing facilities, in coordination with all utility companies, prior to beginning any construction operations. If an existing facility is found to conflict with the proposed construction, the contractor shall immediately notify the engineer so that appropriate measures can be taken to resolve the conflict.

9.8. The contractor shall coordinate the work with other contractors in the area and any other underground utility companies required. The contractor shall coordinate relocation of all existing utilities with applicable utility companies.

10. Signing and Pavement Markings

10.1. All signing and pavement markings installed as part of these plans shall conform to the Federal highway administration (FHWA) "manual on uniform traffic control devices" (MUTCD), County Traffic Design Standards and FDOT design standards as a minimum criteria.

10.2. Match existing pavement markings at the limits of construction.

10.3. Removal of the existing pavement markings shall be accomplished by water blasting or other approved methods determined by the engineer.

10.4. Incorrectly placed paint or thermoplastic pavement markings over friction course will be removed by milling and replacing the friction course a minimum width of 18 in at the contractor's expense. The engineer may approve an alternative method if it can be demonstrated to completely remove the markings without damaging the asphalt.

10.5. Place all retro-reflective pavement markers in accordance with standard index 17352 and / or as shown in the plans.

10.6. Caution should be exercised while relocating existing signs to prevent unnecessary damage to signs. If the sign is damaged beyond use, as determined by the engineer, signs shall be replaced by the contractor at his expense.

10.7. All existing signs that conflict with construction operations shall be removed, stockpiled, and relocated by the contractor. Sign removal shall be directed by the engineer.

10.8. Relocated sign support system must meet the current design standard.

10.9. The contractor shall provide an inventory of existing signs to remain or to be relocated prior to starting the job and forward this list to the engineer. Contractor shall notify if there are any missing or damage signs that the plans show to remain or to be relocated.

10.10. All roadway pavement markings shall be thermoplastic in accordance with FDOT specifications section 711.

10.11. Hand dig the first four feet of sign foundation.

10.12. All signs shall meet all of the following:

- Meet the criteria outlined in Section 2A.08 of the 2009 MUTCD
- Meet the specifications outlined in Section 700 and 994 of the latest FDOT Standard Specifications.
- Consist of materials certified to meet the retroreflective sheeting requirements outlined in the current version of ASTM D4956 for type-XI retroreflective sheeting materials made with prisims, except for school zone and pedestrian signs which shall be comprised of retroreflective fluorescent yellow-green sheeting certified to meet ASTM D4956 Type IV retroreflective sheeting materials.
- Consist of retroreflective sheeting materials that have a valid FDOT Approved Product List (APL) certification for specification 700 Highway Signing for FDOT sheeting Type XI (or type IV for school and pedestrian signs).

10.1. Patch attachment hardware, such as countersunk screws or rivet heads, with retro reflective buttons that match the color and sheeting material of the finished sign panel including the background, legend or border.

10.2. Ensure the outside corner of sign is concentric with border. Ensure white borders are mounted parallel to the edge of the sign. Ensure black borders are recessed from the edge of the sign.

10.3. Lay out permanent final striping that leaves no visible marks at time of final acceptance.

The following items are not reviewed or accepted by Broward County:

1. Broward County Traffic Engineering Division's review does not include a review and acceptance of the project's design or operation. These items are to be reviewed and approved by the City Engineer.

2. Broward County Traffic Engineering Division does not review and approve, or inspect and accept the following items for maintenance: pavement markings on or adjacent to paver bricks, painted asphalt, stamped asphalt or pavement markings made of paver bricks, raised intersections and related markings and signing, un-warranted mid-block crosswalks and related markings and signing, un-warranted crosswalks and related markings and signing, painted/decorative crosswalks, raised crosswalks and related markings and signing, Advanced Warning pavement markings for Speed Tables, Blinker Signs, Rectangular Rapid Flasher Beacons and related markings and signing, on-street parking and related markings and signing, in-road lighting and related markings and signing, green bike lanes, flexible delineators, decorative signs and decorative sign posts, planters, on-site pavement markings and signing, off-site pavement markings and signing in right-of-way that is not dedicated for public use, sidewalk work or asphalt work. 3

3. The City Engineer is responsible for the review and approval of the design and operation of the project, and for the inspection and acceptance of the following items that will be maintained by the City: pavement markings on or adjacent to paver bricks, painted asphalt, stamped asphalt or pavement markings made of paver bricks, pavement markings on or adjacent to painted asphalt, raised intersections and related markings and signing, un-warranted mid-block crosswalks and related markings and signing, un-warranted crosswalks and related markings and signing, painted/decorative crosswalks, raised crosswalks and related markings and signing, Advanced Warning pavement markings for Speed Tables, Blinker Signs, Rectangular Rapid Flasher Beacons and related markings and signing, on-street parking and related markings and signing, in-road lighting and related markings and signing, green bike lanes, flexible delineators, decorative signs and decorative sign posts, planters, on-site pavement markings and signing, off-site pavement markings and signing in right-of-way that is not dedicated for public use, sidewalk work and asphalt work.

KEITH
Corporate Office
301 East Atlantic Boulevard
Pompano Beach, Florida 33060-6643
(954) 788-3400

Miami-Dade County
2160 NW 82 Avenue
Doral, Forida 33122

Palm Beach County
120 N Federal Highway, Suite 208
Lake Worth, Florida 33460

Orange County
2948 E Livingston Street
Orlando, Florida 32803

State of Florida Certificate of Authorization Number - 7928

BID / CONTRACT NO. :

REVISIONS

NO.	DESCRIPTION	DATE
1	PER DRC COMMENTS	6/8/2017
2	PER DRC COMMENTS	8/24/17
3	PER BCHCED COMMENTS	6/15/18

LEDER HILLSBORO STORAGE

SCALE:	AS NOTED
DATE ISSUED:	JANUARY 31, 2018
DRAWN BY:	MG
DESIGNED BY:	MG
CHECKED BY:	SW

STEPHEN D. WILLIAMS, P.E.
FLORIDA REG. NO. 32090
(FOR THE FIRM)

SHEET TITLE

GENERAL NOTES

SHEET NUMBER

GI-003

SHEET 03 of 27

PROJECT NO. 09675.00

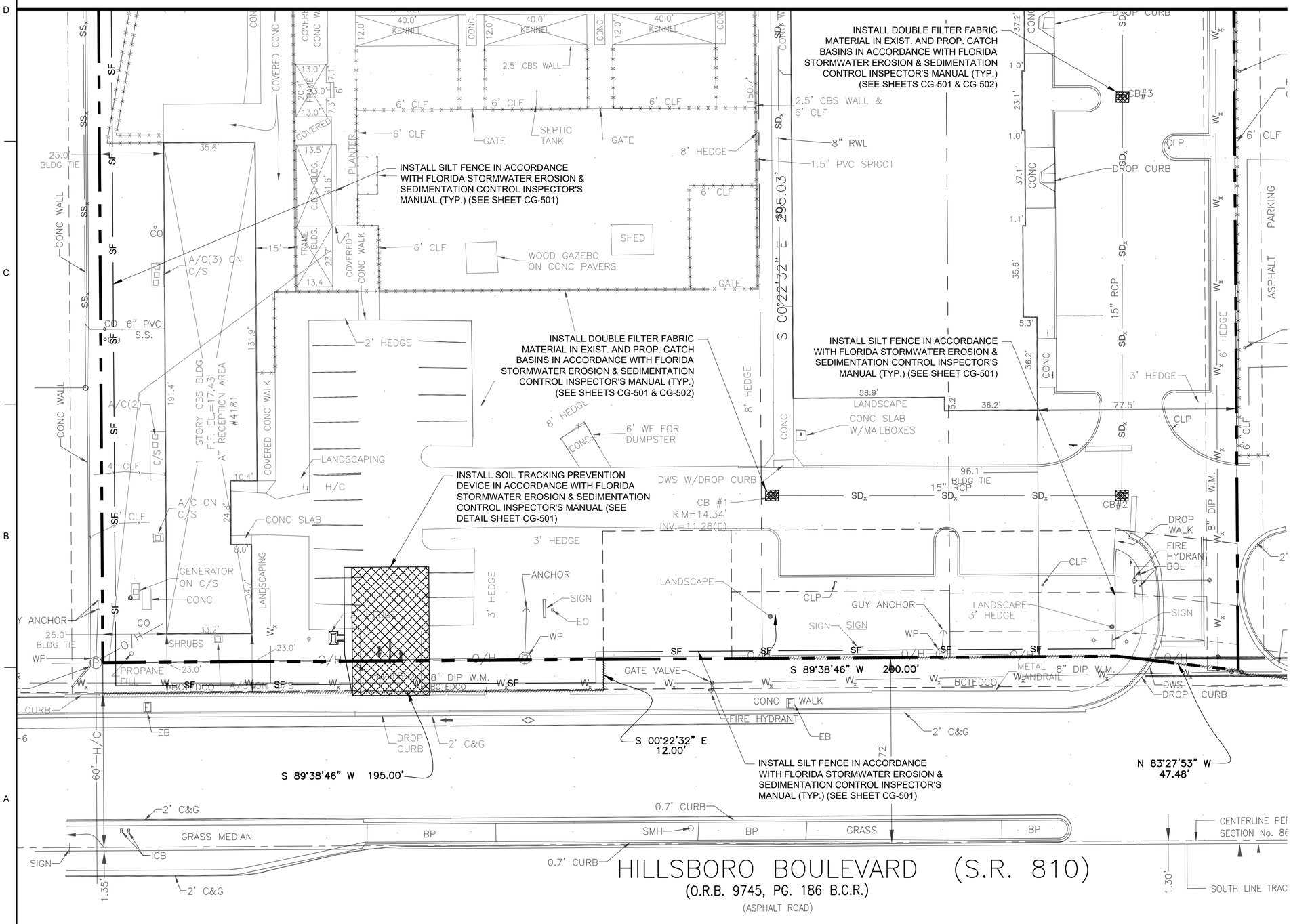

N

GRAPHIC SCALE

0 20 40

SCALE: 1"=20'

NOTE: PRINTED DRAWING SIZE MAY HAVE CHANGED FROM ORIGINAL. VERIFY SCALE USING BAR SCALE ABOVE.

GENERAL NOTES - EROSION CONTROL:

1. THE CONTRACTOR SHALL INSTALL AND MAINTAIN EROSION CONTROL AND SEDIMENTATION CONTROL MEASURES IN ACCORDANCE WITH THE STANDARDS FOR SOIL EROSION AND SEDIMENT CONTROL IN FLORIDA (HEREAFTER REFERRED TO AS FL GUIDELINES).
2. MAINTENANCE MEASURES SHALL BE APPLIED AS NEEDED DURING THE ENTIRE CONSTRUCTION CYCLE. AFTER EACH RAINFALL, A VISUAL INSPECTION SHALL BE MADE OF ALL INSTALLED EROSION CONTROL MEASURES AND REPAIRS SHALL BE CONDUCTED TO ENSURE THEIR CONTINUING FUNCTION AS DESIGNED.
3. CATCH BASIN, INLETS, STORM SEWER MANHOLES STRUCTURES, ETC. SHALL BE PROTECTED DURING CONSTRUCTION OPERATIONS FROM SEDIMENT RUNOFF AND DEBRIS BY PLACING A FILTER FABRIC MATERIAL IN THE FRAME AND GRATE/MANHOLE COVER. PREVENTIVE METHODS MUST BE UTILIZED AROUND THESE STRUCTURES (DURING CONSTRUCTION OPERATIONS) BY GRADING TO DRAIN AWAY FROM STRUCTURES AND ANY OTHER METHODS APPROVED BY THE AGENCY HAVING JURISDICTION OR DESIGN ENGINEER OF RECORD.
4. THE CONTRACTOR SHALL INSTALL A SOIL TRACKING PREVENTION DEVICE AS PER THE FLORIDA STORMWATER EROSION AND SEDIMENTATION CONTROL INSPECTOR'S MANUAL. THE CONTRACTOR SHALL TAKE MEASURES TO INSURE THE CLEANUP OF SEDIMENTS THAT HAVE BEEN TRACKED BY VEHICLES OR HAVE BEEN TRANSPORTED BY WIND OR STORM WATER ABOUT THE SITE OR ONTO NEARBY ROADWAYS. STABILIZED CONSTRUCTION ENTRANCES AND CONSTRUCTION ROADS, IF APPROPRIATE, SHALL BE IMPLEMENTED IN ORDER TO REDUCE OFFSITE TRACKING.
5. ALL AREAS OF DISTURBANCE THAT ARE NOT WITHIN BUILDING OR PAVEMENT LIMITS SHALL BE SODDED, REFER TO LANDSCAPE PLANS FOR SOD SPECIFICATION AND REQUIREMENTS.
6. REMOVE ALL EROSION CONTROL IMPROVEMENTS AFTER ALL DISTURBED AREAS ARE STABILIZED WITH THE FINAL GROUND COVER.

KEITH
Corporate Office
301 East Atlantic Boulevard
Pompano Beach, Florida 33060-6643
(954) 788-3400

Miami-Dade County
2160 NW 82 Avenue
Doral, Florida 33122

Palm Beach County
120 N Federal Highway, Suite 208
Lake Worth, Florida 33460

Orange County
2948 E Livingston Street
Orlando, Florida 32803

State of Florida Certificate of Authorization Number - 7928

BID / CONTRACT NO. :

REVISIONS

NO.	DESCRIPTION	DATE
1	PER DRC COMMENTS	6/8/2017
2	PER DRC COMMENTS	8/24/17

LEDER HILLSBORO STORAGE

SCALE:	AS NOTED
DATE ISSUED:	JANUARY 31, 2018
DRAWN BY:	MG
DESIGNED BY:	MG
CHECKED BY:	SW

STEPHEN D. WILLIAMS, P.E.
FLORIDA REG. NO. 32090
(FOR THE FIRM)

SHEET TITLE

STORM WATER POLLUTION PREVENTION PLAN

SHEET NUMBER

CG-101

SHEET 04 of 27

PROJECT NO. 09675.00

Drawing name: N:\09\09675.00 - Peri Lodge - Leder Group\Engineering\Cad\09675.00-CG-101-TOC.dwg Layout Name: CG-101 Plotted by: MGirnbarik Plotted on: Jun 20, 2018 - 8:02am

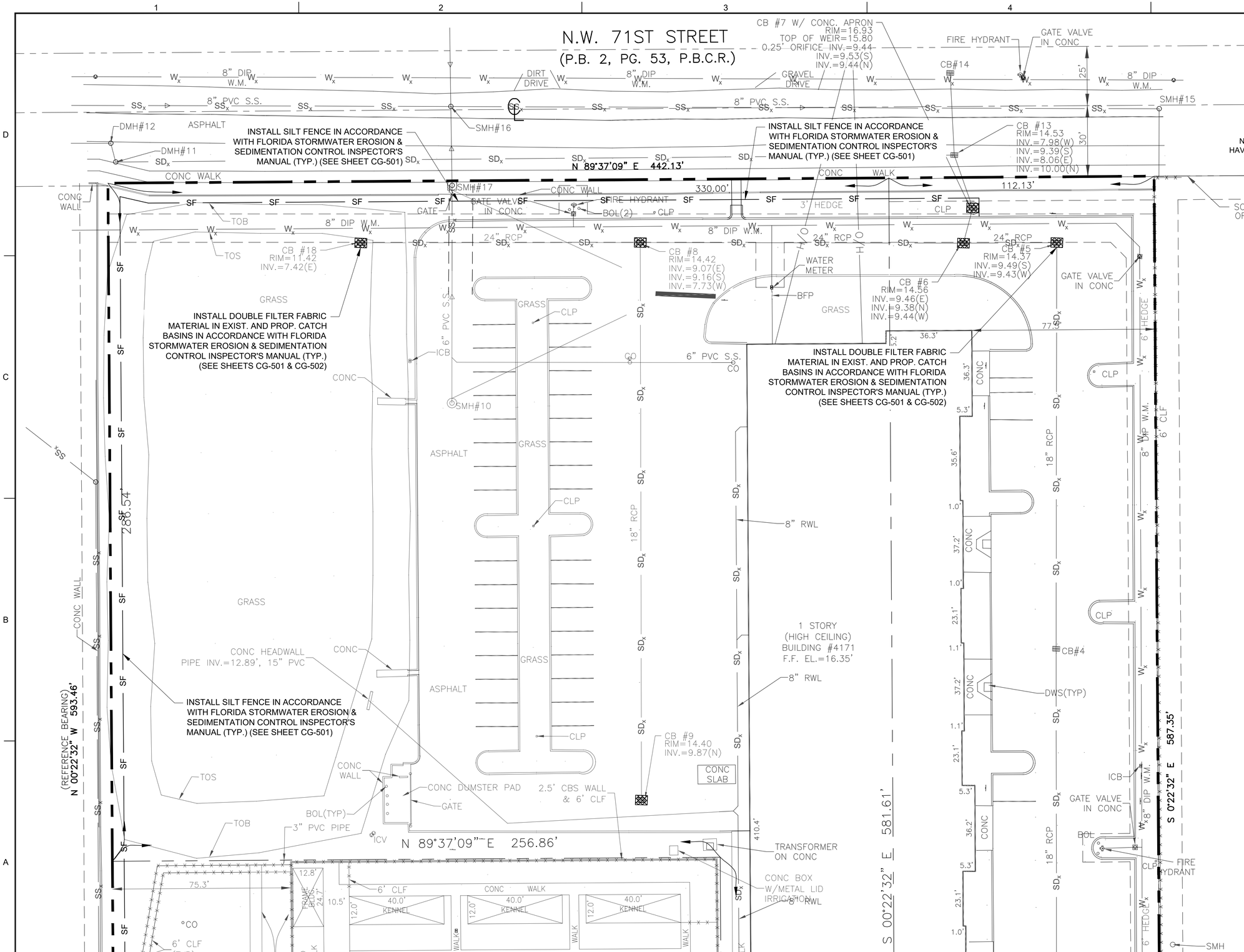

N

GRAPHIC SCALE

0 20 40

SCALE: 1"=20'

NOTE: PRINTED DRAWING SIZE MAY HAVE CHANGED FROM ORIGINAL. VERIFY SCALE USING BAR SCALE ABOVE.

KEITH

Corporate Office
301 East Atlantic Boulevard
Pompano Beach, Florida 33060-6643
(954) 788-3400

Miami-Dade County
2160 NW 82 Avenue
Doral, Florida 33122

Palm Beach County
120 N Federal Highway, Suite 208
Lake Worth, Florida 33460

Orange County
2948 E Livingston Street
Orlando, Florida 32803

State of Florida Certificate of Authorization Number - 7928

BID / CONTRACT NO. :

REVISIONS

NO.	DESCRIPTION	DATE
1	PER DRC COMMENTS	6/8/2017
2	PER DRC COMMENTS	8/24/17

LEDER HILLSBORO STORAGE

SCALE:	AS NOTED
DATE ISSUED:	JANUARY 31, 2018
DRAWN BY:	MG
DESIGNED BY:	MG
CHECKED BY:	SW

STEPHEN D. WILLIAMS, P.E.
FLORIDA REG. NO. 32090
(FOR THE FIRM)

SHEET TITLE

STORM WATER POLLUTION PREVENTION PLAN

SHEET NUMBER

CG-102

SHEET 05 of 27

PROJECT NO. 09675.00

Drawing name: N:\09\09675.00 - Pet Lodge - Leder Group\Engineering\Cadd\09675.00-CG-1XX.dwg Layout Name: CG-102 Plotted by: MGinnbank Plotted on: Jun 20, 2018 - 8:02am

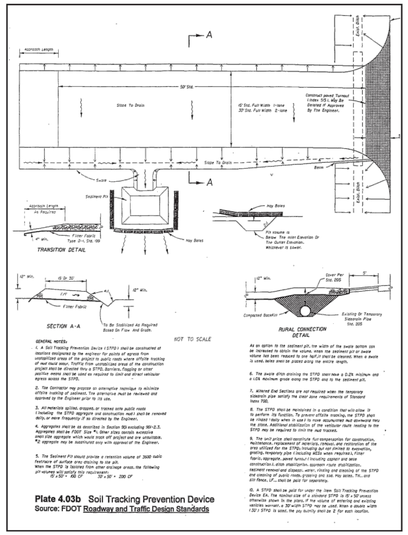

FIGURE 4.3b. SOIL TRACKING PREVENTION DEVICE
SOURCE: FLORIDA STORMWATER EROSION AND SEDIMENTATION CONTROL INSPECTOR'S MANUAL

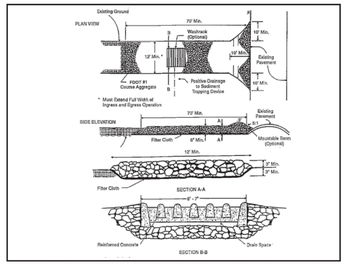

FIGURE 4.3c. CONSTRUCTION ENTRANCE WITH WASH RACK
SOURCE: FLORIDA STORMWATER EROSION AND SEDIMENTATION CONTROL INSPECTOR'S MANUAL

Location

The entrance should be located to provide for maximum utility by all construction vehicles.

Construction Specifications

The entrance area should be cleared of all vegetation, roots, and other objectionable material. A geotextile should be laid down to improve stability and simplify maintenance when gravel is used. The gravel shall then be placed over the geotextile to the specified dimensions.

Maintenance

The stabilized construction exit shall be maintained in a condition that will prevent the tracking or flow of mud onto public rights of way. This may require periodic maintenance as conditions demand, and the repair and/or cleanout of any structures used to trap sediments. All materials spilled, dropped, washed, or tracked from vehicles onto roadways or into storm drains must be removed immediately. Look for signs of trucks and trailered equipment "cutting corners" where the construction exit meets the roadway. Sweep the paved road as needed.

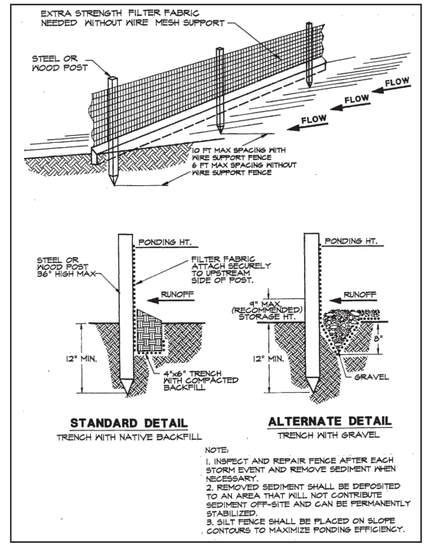

FIGURE 4.4a. SILT FENCE
SOURCE: FLORIDA STORMWATER EROSION AND SEDIMENTATION CONTROL INSPECTOR'S MANUAL

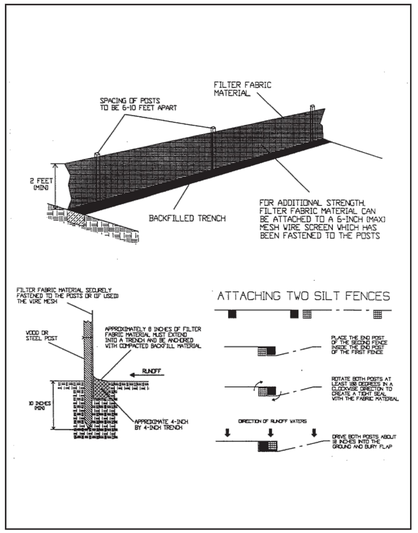

FIGURE 4.4b. INSTALLING A FILTER FABRIC SILT FENCE
SOURCE: FLORIDA STORMWATER EROSION AND SEDIMENTATION CONTROL INSPECTOR'S MANUAL

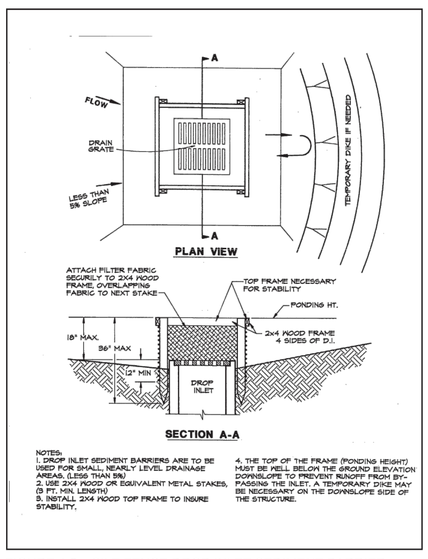

FIGURE 4.5a. SILT FENCE DROP INLET SEDIMENT BARRIER
SOURCE: FLORIDA STORMWATER EROSION AND SEDIMENTATION CONTROL INSPECTOR'S MANUAL

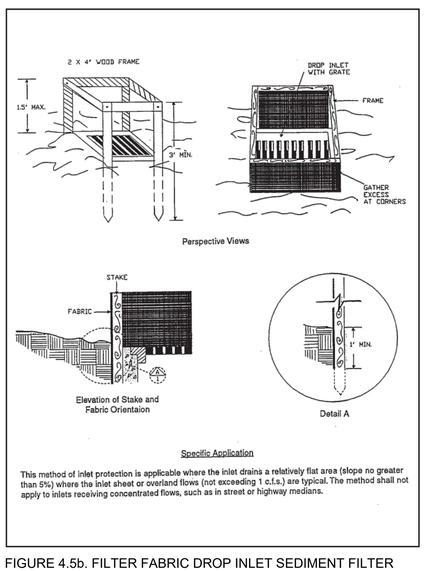

FIGURE 4.5b. FILTER FABRIC DROP INLET SEDIMENT FILTER
SOURCE: FLORIDA STORMWATER EROSION AND SEDIMENTATION CONTROL INSPECTOR'S MANUAL

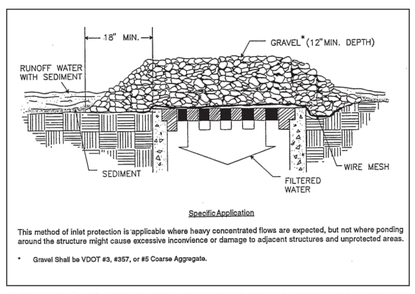

FIGURE 4.5c. GRAVEL AND WIRE MESH DROP INLET SEDIMENT FILTER
SOURCE: FLORIDA STORMWATER EROSION AND SEDIMENTATION CONTROL INSPECTOR'S MANUAL

Block and Gravel Drop Inlet Sediment Filter

1. *Place concrete blocks lengthwise on their sides in a single row around the perimeter of the inlet, with the ends of adjacent blocks abutting. The height of the barrier can be varied, depending on design needs, by stacking combinations of 4, 8, and 12 inch wide (10, 20, and 30 cm) blocks. The barrier of blocks shall be at least 12 inches (30 cm) high and no greater than 24 inches (60 cm) high.*
2. *Wire mesh shall be placed over the outside vertical face (webbing) of the concrete blocks to prevent stone from being washed through the holes in the blocks. Hardware cloth or comparable wire mesh with ½ inch (13 mm) openings shall be used (see **Figure 4.5d**).*
3. *Stone shall be piled against the wire to the top of the block barrier. Suitable coarse aggregate shall be used (see **Figure 4.5d**).*
4. *If the stone filter becomes clogged with sediment so that it no longer adequately performs its function, the stone must be pulled away from the blocks, cleaned, and replaced.*

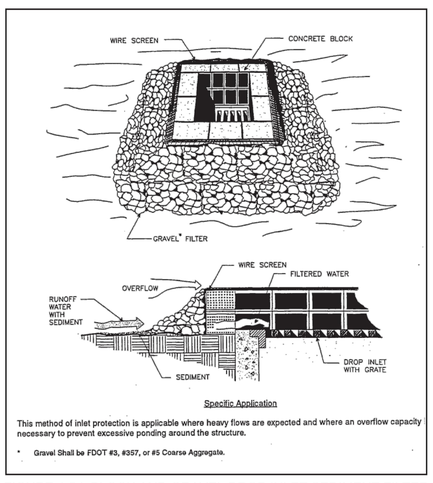

FIGURE 4.5d. BLOCK AND GRAVEL DROP INLET SEDIMENT FILTER
SOURCE: FLORIDA STORMWATER EROSION AND SEDIMENTATION CONTROL INSPECTOR'S MANUAL

KEITH
Corporate Office
301 East Atlantic Boulevard
Pompano Beach, Florida 33060-6643
(954) 788-3400

Miami-Dade County
2160 NW 82 Avenue
Doral, Forida 33122

Palm Beach County
120 N Federal Highway, Suite 208
Lake Worth, Florida 33460

Orange County
2948 E Livingston Street
Orlando, Florida 32803

State of Florida Certificate of Authorization Number - 7928

BID / CONTRACT NO. :

REVISIONS

NO.	DESCRIPTION	DATE
1	PER DRC COMMENTS	6/8/2017
2	PER DRC COMMENTS	8/24/17

LEDER HILLSBORO STORAGE

SCALE:	AS NOTED
DATE ISSUED:	JANUARY 31, 2018
DRAWN BY:	MG
DESIGNED BY:	MG
CHECKED BY:	SW

STEPHEN D. WILLIAMS, P.E.
FLORIDA REG. NO. 32090
(FOR THE FIRM)

SHEET TITLE

STORM WATER POLLUTION PREVENTION DETAILS

SHEET NUMBER

CG-501

SHEET 06 of 27

PROJECT NO. 09675.00

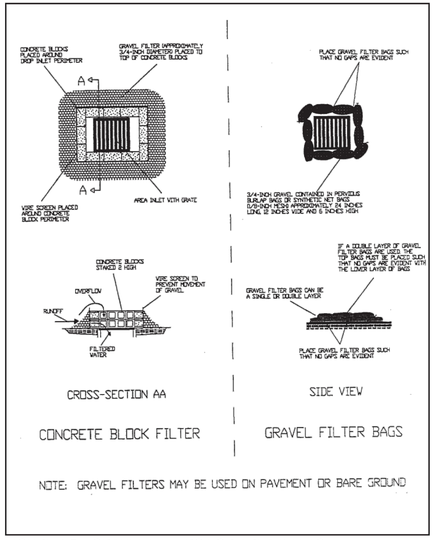

FIGURE 4.5e. GRAVEL FILTERS FOR AREA INLETS
SOURCE: FLORIDA STORMWATER EROSION AND SEDIMENTATION CONTROL INSPECTOR'S MANUAL

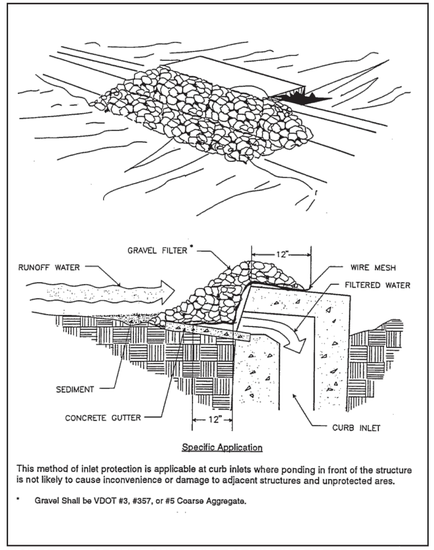

FIGURE 4.5g. GRAVEL CURB INLET SEDIMENT FILTER
SOURCE: FLORIDA STORMWATER EROSION AND SEDIMENTATION CONTROL INSPECTOR'S MANUAL

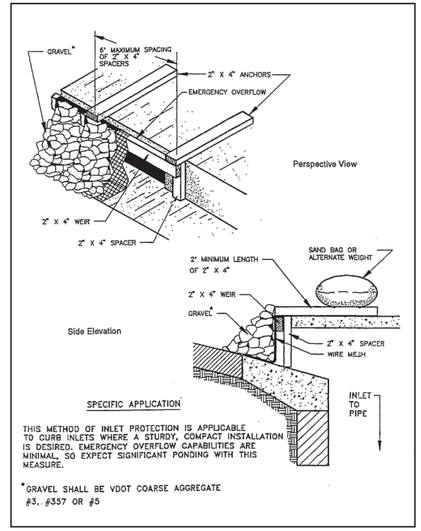

FIGURE 4.5h. GRAVEL CURB INLET SEDIMENT FILTER WITH OVERFLOW WEIR
SOURCE: FLORIDA STORMWATER EROSION AND SEDIMENTATION CONTROL INSPECTOR'S MANUAL

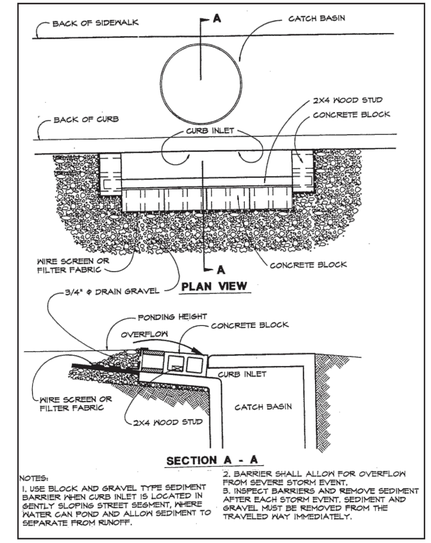

FIGURE 4.5i. BLOCK AND GRAVEL CURB INLET SEDIMENT BARRIER
SOURCE: FLORIDA STORMWATER EROSION AND SEDIMENTATION CONTROL INSPECTOR'S MANUAL

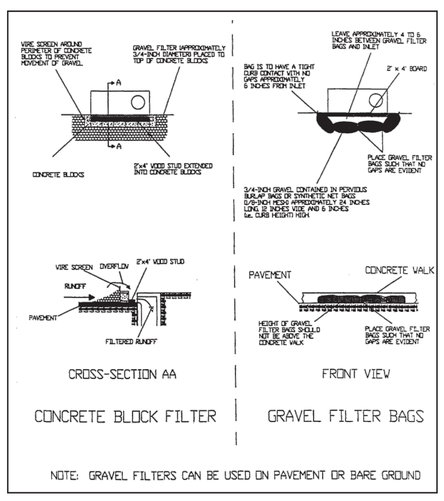

FIGURE 4.5j. CURB INLET GRAVEL FILTERS
SOURCE: FLORIDA STORMWATER EROSION AND SEDIMENTATION CONTROL INSPECTOR'S MANUAL

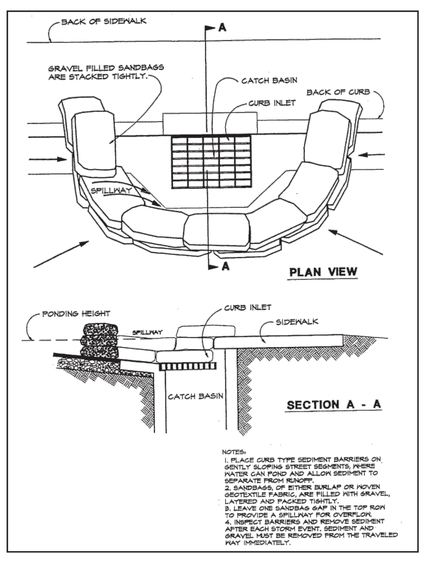

FIGURE 4.5k. CURB INLET SEDIMENT BARRIER
SOURCE: FLORIDA STORMWATER EROSION AND SEDIMENTATION CONTROL INSPECTOR'S MANUAL

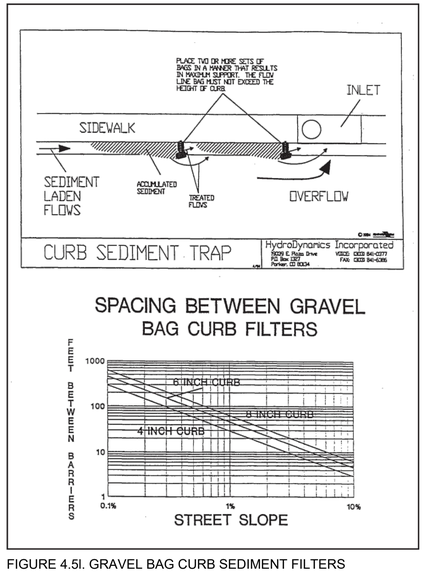

FIGURE 4.5l. GRAVEL BAG CURB SEDIMENT FILTERS
SOURCE: FLORIDA STORMWATER EROSION AND SEDIMENTATION CONTROL INSPECTOR'S MANUAL

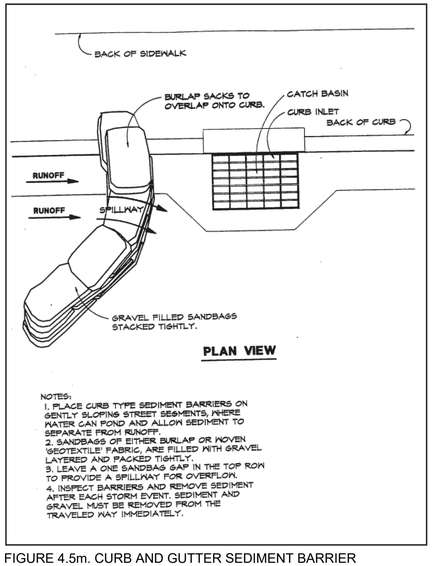

FIGURE 4.5m. CURB AND GUTTER SEDIMENT BARRIER
SOURCE: FLORIDA STORMWATER EROSION AND SEDIMENTATION CONTROL INSPECTOR'S MANUAL

KEITH
Corporate Office
301 East Atlantic Boulevard
Pompano Beach, Florida 33060-6643
(954) 788-3400

Miami-Dade County
2160 NW 82 Avenue
Doral, Florida 33122

Palm Beach County
120 N Federal Highway, Suite 208
Lake Worth, Florida 33460

Orange County
2948 E Livingston Street
Orlando, Florida 32803

State of Florida Certificate of Authorization Number - 7928

BID / CONTRACT NO. :

REVISIONS

NO.	DESCRIPTION	DATE
1	PER DRC COMMENTS	6/8/2017
2	PER DRC COMMENTS	8/24/17

LEDER HILLSBORO STORAGE

SCALE:	AS NOTED
DATE ISSUED:	JANUARY 31, 2018
DRAWN BY:	MG
DESIGNED BY:	MG
CHECKED BY:	SW

STEPHEN D. WILLIAMS, P.E.
FLORIDA REG. NO. 32090
(FOR THE FIRM)

SHEET TITLE

STORM WATER POLLUTION PREVENTION DETAILS

SHEET NUMBER

CG-502

SHEET 07 of 27

PROJECT NO. 09675.00

MATCH LINE-SEE SHEET CD-102

N

GRAPHIC SCALE

0 20 40

SCALE: 1"=20'

NOTE: PRINTED DRAWING SIZE MAY HAVE CHANGED FROM ORIGINAL. VERIFY SCALE USING BAR SCALE ABOVE.

CONTRACTOR TO DEMOLISH EXIST. BUILDINGS (SEE ARCH. PLANS FOR DETAILS)

CONTRACTOR TO DEMOLISH EXIST. FENCES (TYP.)

CONTRACTOR TO DEMOLISH EXIST. BUILDING (SEE ARCH. PLANS FOR DETAILS)

CONTRACTOR TO DEMOLISH EXIST. BUILDINGS, WALLS, SIDEWALKS AND FENCES (TYP.)

CONTRACTOR TO DEMOLISH EXIST. SEPTIC SYSTEM IN ACCORDANCE WITH LOCAL REGULATIONS

CONTRACTOR TO DEMOLISH 231 LF OF EXIST. SIDEWALK

CONTRACTOR TO DEMOLISH EXIST. PARKING LOT, SIDEWALKS DUMPSTER ENCLOSURE AND CONC. PAD, FENCES AND WALLS

EXIST. CONC. SLAB AND MAILBOXES TO REMAIN

EXIST. SEWER SANITARY SERVICE TO REMAIN

CONTRACTOR TO REMOVE 20 LF - EXIST. CONC. WALL

CONTRACTOR TO DEMOLISH EXIST. SIDEWALKS (TYP.)

CONTRACTOR TO COORDINATE REMOVAL OF GENERATOR WITH OWNER

REMOVE EXIST. DRAINAGE STRUCTURE

CONTRACTOR TO REMOVE (2) EXIST. STOP BARS

CONTRACTOR TO REMOVE EXIST. SIGN

CONTRACTOR TO REMOVE STOP BAR AND 6-LF 6" DOUBLE YELLOW

EXIST. STOP SIGN TO REMAIN

CONTRACTOR TO REMOVE 13 LF OF EXIST. CURB

CONTRACTOR TO REMOVE EXIST. WATER SERVICE AND PLUGGED AT WATER MAIN

CONTRACTOR TO REMOVE 269 LF OF EXIST. STRIPING

CONTRACTOR TO REMOVE 269 LF OF EXIST. CURB AND GUTTER

CONTRACTOR TO REMOVE EXIST. CONC. SIDEWALK

CONTRACTOR TO REMOVE EXIST. HANDRAIL

REMOVE 123 S.F. OF EXIST. SIDEWALK AND ADA RAMP

CONTRACTOR TO REMOVE EXIST. CROSS WALK PAVEMENT MARKINGS

S 89°38'46" W 200.00'

S 00°22'32" E 12.00'

S 89°38'46" W 195.00'

N 83°27'53" W 47.48'

HILLSBORO BOULEVARD (S.R. 810)

(O.R.B. 9745, PG. 186 B.C.R.)

(ASPHALT ROAD)

ALL WATER AND SEWER APPURTENANCES DEMOLISHED MUST BE COMPLETELY REMOVED.

CONTRACTOR TO COORDINATE REMOVAL OF MECHANICAL EQUIPMENT WITH OWNER

KEITH & ASSOCIATES, INC.
consulting engineers

301 East Atlantic Boulevard
Pompano Beach, Florida 33060-6643

2160 NW 82nd Avenue
Doral, Florida 33122

P: (954) 788-3400 F: (954) 788-3500

Florida Certificate of Authorization # - 7928

BID / CONTRACT NO. :

REVISIONS

NO.	DESCRIPTION	DATE
1	PER DRC COMMENTS	6/8/2017
2	PER DRC COMMENTS	8/24/17
3	PER CITY COMMENTS	12/28/2017

LEDER HILLSBORO STORAGE

SCALE:	AS NOTED
DATE ISSUED:	JANUARY 31, 2018
DRAWN BY:	MG
DESIGNED BY:	MG
CHECKED BY:	SW

STEPHEN D. WILLIAMS, P.E.
FLORIDA REG. NO. 32090
(FOR THE FIRM)

SHEET TITLE

DEMOLITION PLAN

SHEET NUMBER

CD-101

SHEET 08 of 26

PROJECT NO. 09675.00

Drawing name: N:\09\09675.00 - Peri Lodge - Leder Group\Engineering\Cad\09675.00-CD-101X.dwg Layout Name: CD-101 Plotted by: MGimbunk Plotted on: Apr 26, 2018 - 2:16pm

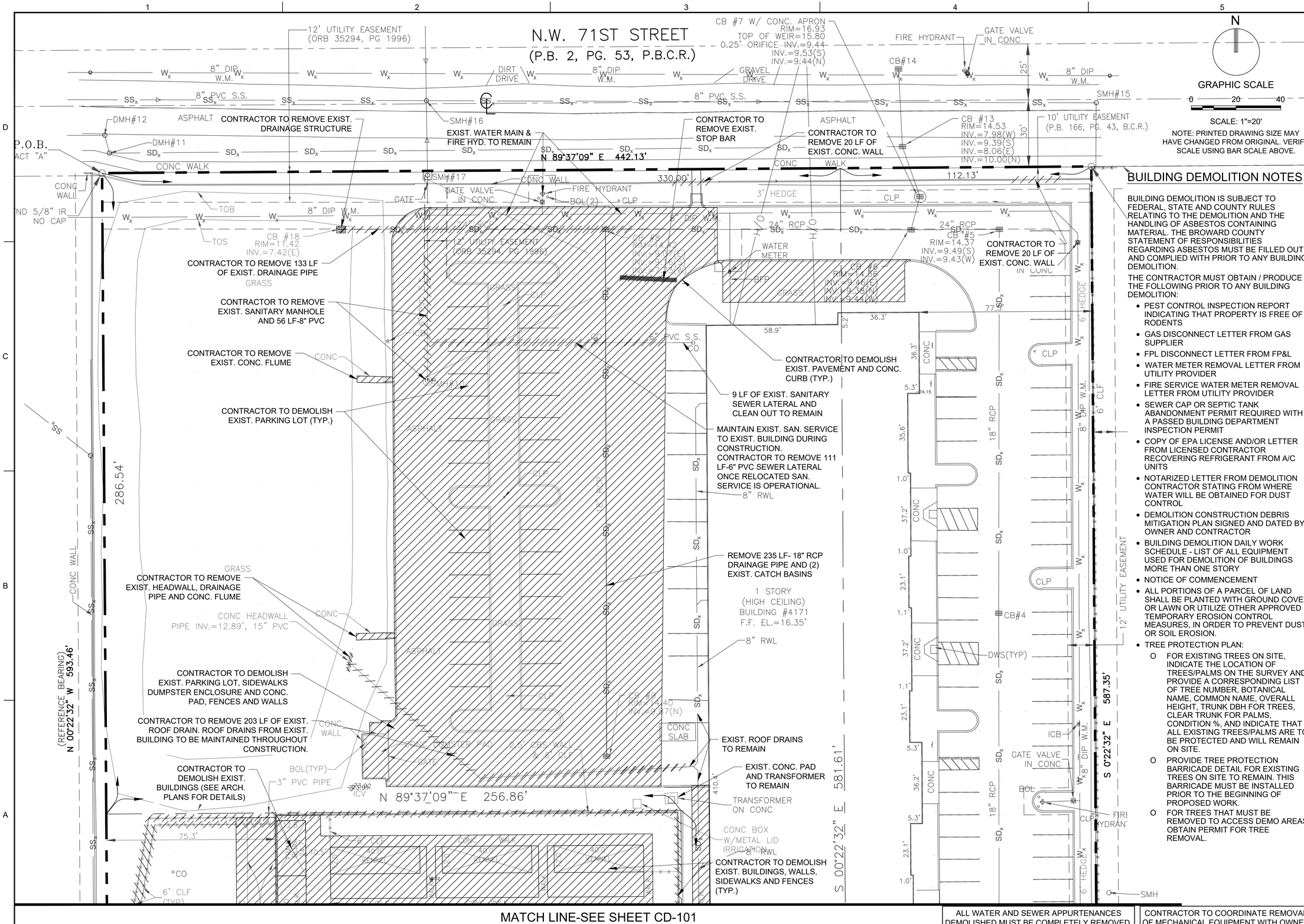

N

GRAPHIC SCALE

0 20 40

SCALE: 1"=20'

NOTE: PRINTED DRAWING SIZE MAY HAVE CHANGED FROM ORIGINAL. VERIFY SCALE USING BAR SCALE ABOVE.

BUILDING DEMOLITION NOTES

BUILDING DEMOLITION IS SUBJECT TO FEDERAL, STATE AND COUNTY RULES RELATING TO THE DEMOLITION AND THE HANDLING OF ASBESTOS CONTAINING MATERIAL. THE BROWARD COUNTY STATEMENT OF RESPONSIBILITIES REGARDING ASBESTOS MUST BE FILLED OUT AND COMPLIED WITH PRIOR TO ANY BUILDING DEMOLITION.

THE CONTRACTOR MUST OBTAIN / PRODUCE THE FOLLOWING PRIOR TO ANY BUILDING DEMOLITION:

- PEST CONTROL INSPECTION REPORT INDICATING THAT PROPERTY IS FREE OF RODENTS
- GAS DISCONNECT LETTER FROM GAS SUPPLIER
- FPL DISCONNECT LETTER FROM FP&L
- WATER METER REMOVAL LETTER FROM UTILITY PROVIDER
- FIRE SERVICE WATER METER REMOVAL LETTER FROM UTILITY PROVIDER
- SEWER CAP OR SEPTIC TANK ABANDONMENT PERMIT REQUIRED WITH A PASSED BUILDING DEPARTMENT INSPECTION PERMIT
- COPY OF EPA LICENSE AND/OR LETTER FROM LICENSED CONTRACTOR RECOVERING REFRIGERANT FROM A/C UNITS
- NOTARIZED LETTER FROM DEMOLITION CONTRACTOR STATING FROM WHERE WATER WILL BE OBTAINED FOR DUST CONTROL
- DEMOLITION CONSTRUCTION DEBRIS MITIGATION PLAN SIGNED AND DATED BY OWNER AND CONTRACTOR
- BUILDING DEMOLITION DAILY WORK SCHEDULE - LIST OF ALL EQUIPMENT USED FOR DEMOLITION OF BUILDINGS MORE THAN ONE STORY
- NOTICE OF COMMENCEMENT
- ALL PORTIONS OF A PARCEL OF LAND SHALL BE PLANTED WITH GROUND COVER OR LAWN OR UTILIZE OTHER APPROVED TEMPORARY EROSION CONTROL MEASURES, IN ORDER TO PREVENT DUST OR SOIL EROSION.
- TREE PROTECTION PLAN:
  - O FOR EXISTING TREES ON SITE, INDICATE THE LOCATION OF TREES/PALMS ON THE SURVEY AND PROVIDE A CORRESPONDING LIST OF TREE NUMBER, BOTANICAL NAME, COMMON NAME, OVERALL HEIGHT, TRUNK DBH FOR TREES, CLEAR TRUNK FOR PALMS, CONDITION %, AND INDICATE THAT ALL EXISTING TREES/PALMS ARE TO BE PROTECTED AND WILL REMAIN ON SITE.
  - O PROVIDE TREE PROTECTION BARRICADE DETAIL FOR EXISTING TREES ON SITE TO REMAIN. THIS BARRICADE MUST BE INSTALLED PRIOR TO THE BEGINNING OF PROPOSED WORK.
  - O FOR TREES THAT MUST BE REMOVED TO ACCESS DEMO AREAS, OBTAIN PERMIT FOR TREE REMOVAL.

MATCH LINE-SEE SHEET CD-101

ALL WATER AND SEWER APPURTENANCES DEMOLISHED MUST BE COMPLETELY REMOVED.

CONTRACTOR TO COORDINATE REMOVAL OF MECHANICAL EQUIPMENT WITH OWNER

KEITH & ASSOCIATES, INC.
consulting engineers
301 East Atlantic Boulevard
Pompano Beach, Florida 33060-6643
2160 NW 82nd Avenue
Doral, Florida 33122
P: (954) 788-3400 F: (954) 788-3500
Florida Certificate of Authorization # - 7928

BID / CONTRACT NO. :

REVISIONS

NO.	DESCRIPTION	DATE
1	PER DRC COMMENTS	6/8/2017
2	PER DRC COMMENTS	8/24/17

LEDER HILLSBORO STORAGE

SCALE:	AS NOTED
DATE ISSUED:	JANUARY 31, 2018
DRAWN BY:	MG
DESIGNED BY:	MG
CHECKED BY:	SW

STEPHEN D. WILLIAMS, P.E.
FLORIDA REG. NO. 32090
(FOR THE FIRM)

SHEET TITLE

DEMOLITION PLAN

SHEET NUMBER

CD-102

SHEET 09 of 26

PROJECT NO. 09675.00

Drawing name: N:\09\09675.00 - Pol Lodge - Leder Group\Engineering\Cadd\09675.00-CD-1XX.dwg Layout Name: CD-102 Plotted by: MGrimbank Plotted on: Apr 26, 2018 - 2:18pm

BCHCED REF. # 180514051

9A CONST. 24" NYLOPLAST HEAVY DUTY DRAIN (OR APPROVED EQUAL) BASIN W/ H-20 GRATE GRATE EL.=14.07 INV. EL.=10.15 (N,E)

11A CONST. 24" NYLOPLAST HEAVY DUTY DRAIN (OR APPROVED EQUAL) BASIN W/ H-20 GRATE GRATE EL.=14.40 INV. EL.=10.15 (N,W)

11B CONST. 24" NYLOPLAST HEAVY DUTY DRAIN (OR APPROVED EQUAL) BASIN W/ H-20 GRATE GRATE EL.=14.47 INV. EL.=10.15 (N,E,W)

BROWARD COUNTY HIGHWAY CONSTRUCTION AND ENGINEERING DIVISION

☐ PLAT CONSISTENT WITH PLAT REQUIREMENTS PUBLIC R/W

☐ PUBLIC RIGHT OF WAY APPROVAL FOR PAVING, GRADING AND DRAINAGE

BY:_____ DATE:_____

DOES NOT INCLUDE APPROVAL OF PAVEMENT MARKINGS & SIGNS

THE PRESENCE OF GROUNDWATER SHOULD BE ANTICIPATED. CONTRACTOR'S BID SHALL INCLUDE CONSIDERATION FOR ADDRESSING THIS ISSUE AND OBTAINING ALL NECESSARY PERMITS.

NOTE: PRINTED DRAWING SIZE MAY HAVE CHANGED FROM ORIGINAL. VERIFY SCALE USING BAR SCALE ABOVE.

N

GRAPHIC SCALE 0 20 40

SCALE: 1"=20'

MATCH LINE-SEE SHEET CP-102

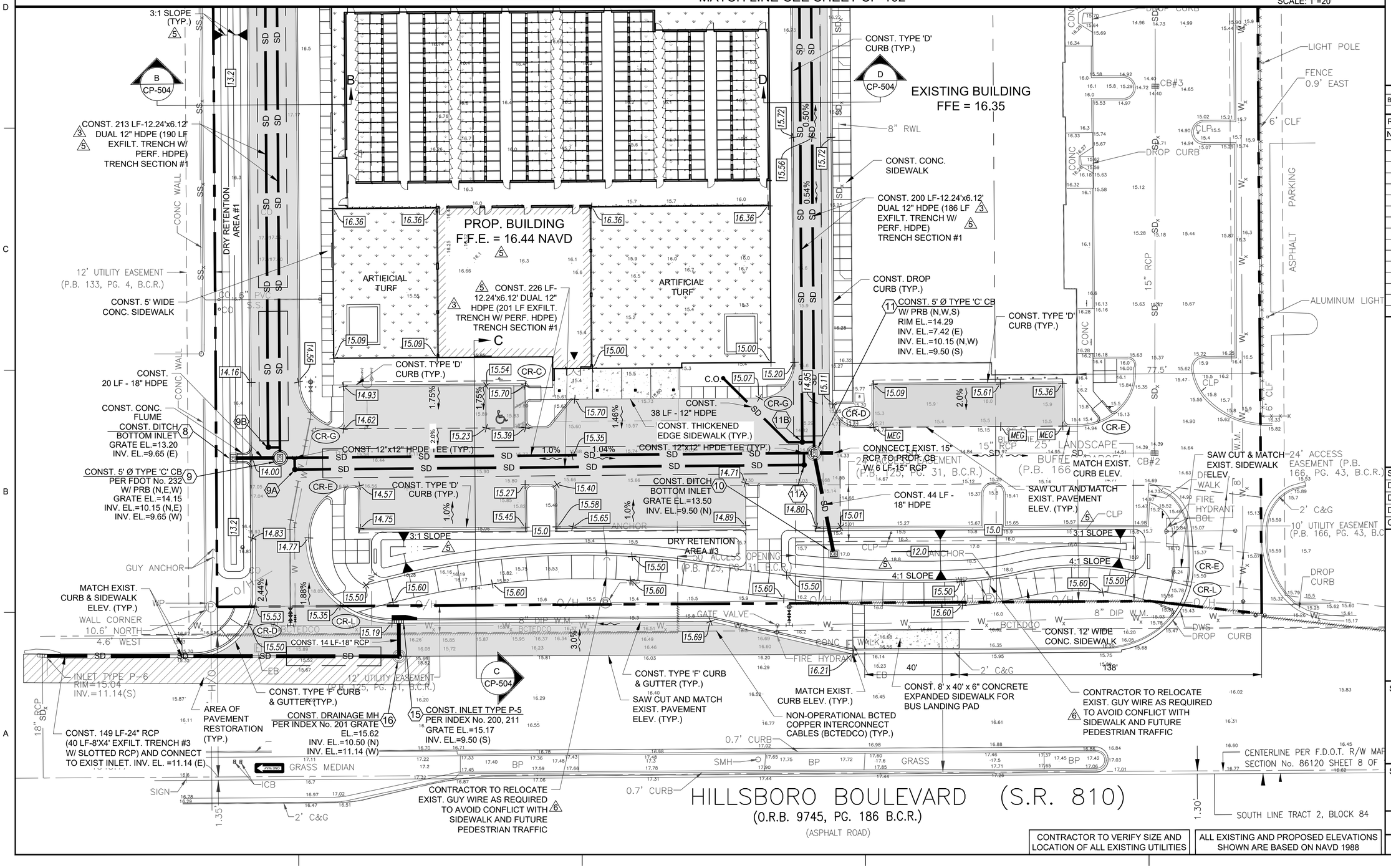

CONTRACTOR TO VERIFY SIZE AND LOCATION OF ALL EXISTING UTILITIES

ALL EXISTING AND PROPOSED ELEVATIONS SHOWN ARE BASED ON NAVD 1988

KEITH

Corporate Office
301 East Atlantic Boulevard
Pompano Beach, Florida 33060-6643
(954) 788-3400

Miami-Dade County
2160 NW 82 Avenue
Doral, Florida 33122

Palm Beach County
120 N Federal Highway, Suite 208
Lake Worth, Florida 33460

Orange County
2948 E Livingston Street
Orlando, Florida 32803

State of Florida Certificate of Authorization Number - 7928

BID / CONTRACT NO. :

REVISIONS

NO.	DESCRIPTION	DATE
1	PER DRC COMMENTS	6/8/2017
2	PER DRC COMMENTS	8/24/17
3	PER BCEPGMD COMMENTS	12/12/2017
4	PER CITY COMMENTS	12/28/2017
5	PER BCEPGMD COMMENTS	3/29/18
6	PER BCHCED COMMENTS	6/15/18

LEDER HILLSBORO STORAGE

SCALE:	AS NOTED
DATE ISSUED:	JANUARY 31, 2018
DRAWN BY:	MG
DESIGNED BY:	MG
CHECKED BY:	SW

STEPHEN D. WILLIAMS, P.E.
FLORIDA REG. NO. 32090
(FOR THE FIRM)

SHEET TITLE

PAVING, GRADING AND DRAINAGE PLAN

SHEET NUMBER

CP-101

SHEET 10 of 27

PROJECT NO. 09675.00

Drawing name: N:\09\09675.00 - Pet Lodge - Leder Group\Engineering\Cad\09675.00-CP-100.dwg Layout Name: CP-101 Plotted by: MGrinkank Plotted on: Jun 20, 2018 - 8:03am

BCHCED REF. # 180514051

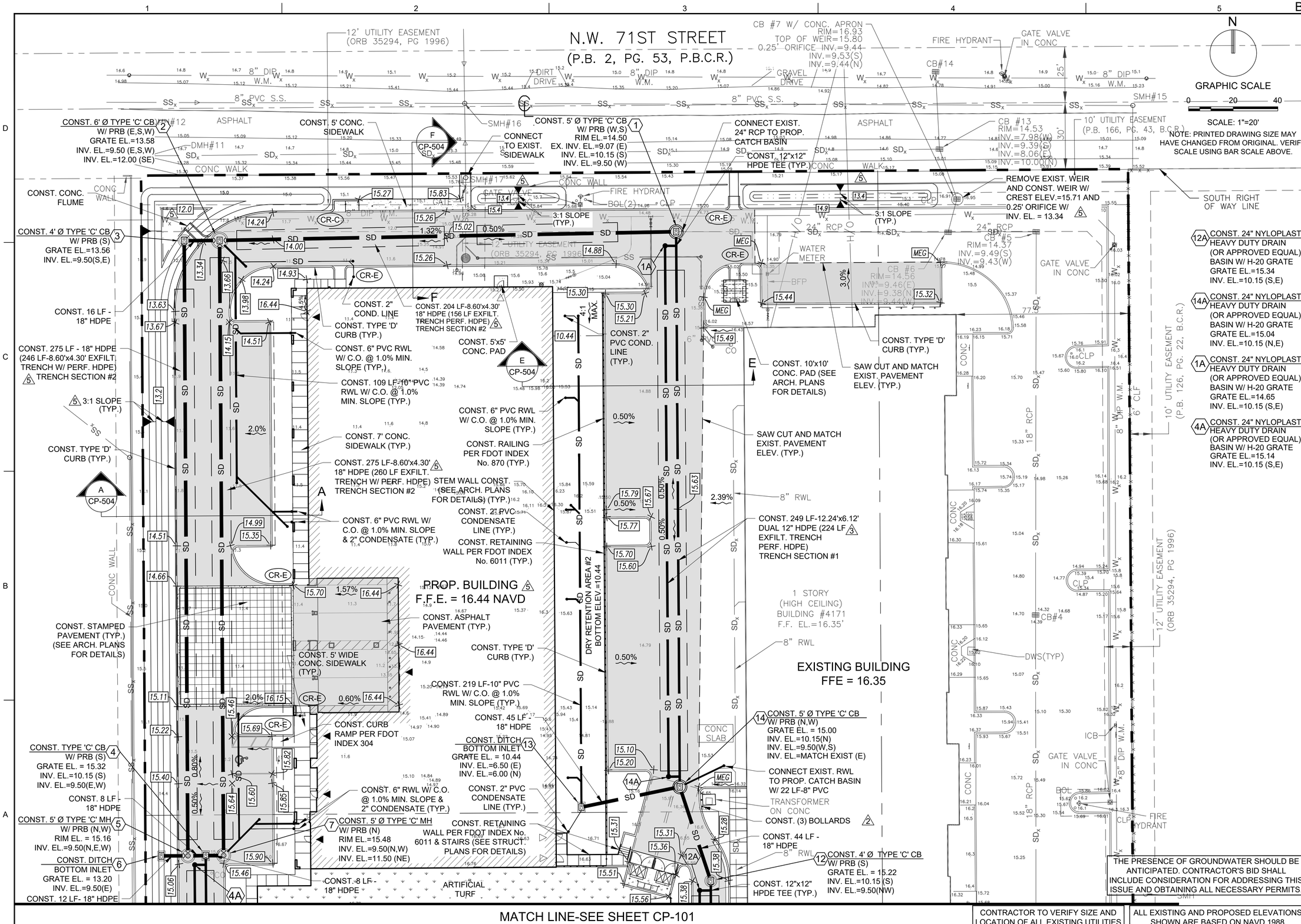

KEITH
Corporate Office
301 East Atlantic Boulevard
Pompano Beach, Florida 33060-6643
(954) 788-3400

Miami-Dade County
2160 NW 82 Avenue
Doral, Forida 33122

Palm Beach County
120 N Federal Highway, Suite 208
Lake Worth, Florida 33460

Orange County
2948 E Livingston Street
Orlando, Florida 32803

State of Florida Certificate of Authorization Number - 7928

BID / CONTRACT NO. :

REVISIONS

NO.	DESCRIPTION	DATE
1	PER DRC COMMENTS	6/8/2017
2	PER DRC COMMENTS	8/24/17
3	PER BCEPGMD COMMENTS	12/12/2017
4	PER CITY COMMENTS	12/28/2017
5	PER BCEPGMD COMMENTS	6/15/18

LEDER HILLSBORO STORAGE

SCALE:	AS NOTED
DATE ISSUED:	JANUARY 31, 2018
DRAWN BY:	MG
DESIGNED BY:	MG
CHECKED BY:	SW

STEPHEN D. WILLIAMS, P.E.
FLORIDA REG. NO. 32090
(FOR THE FIRM)

SHEET TITLE

PAVING, GRADING AND DRAINAGE PLAN

SHEET NUMBER

CP-102

SHEET 11 of 27

PROJECT NO. 09675.00

Drawing name: N:\09\09675.00 - Pint Ledge - Leder Group\Engineering\Cads\09675.00-CP-100.dwg Layout Name: CP-102 Plotted by: MGrimbank Plotted on: Jun 20, 2018 - 8:03am

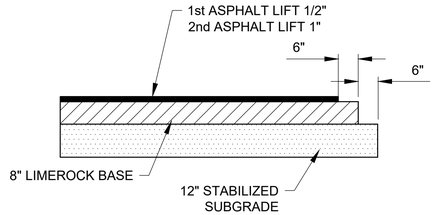

ASPHALTIC CONCRETE VEHICULAR:
FIRST LIFT - 1/2" FDOT - SP 9.5 (FINE MIX).
SECOND (FINAL) LIFT - 1" FDOT - SP 9.5 (FINE MIX).
ASPHALT SURFACE COURSE SHALL CONFORM TO THE REQUIREMENTS OF FDOT STANDARDS SPECIFICATIONS SECTIONS 330 AND 334.
SECOND LIFT OF ASPHALT SHALL NOT BE PLACED UNTIL FINAL LANDSCAPE/HARDSCAPE HAS BEEN INSTALLED.

PRIME AND TACK COAT:
LIMEROCK BASE COURSE SHALL CONFORM TO THE REQUIREMENTS OF FDOT STANDARDS SPECIFICATIONS SECTION 300.
APPLICATION RATES:
PRIME COAT - 0.10 GALLONS PER SQ. YD.
TACK COAT - 0.08 GALLONS PER SQ. YD.

BASE:
8" LIMEROCK BASE COMPACTED TO 98% OF MAXIMUM DENSITY (AASHTO T-180), LIMEROCK BASE TO CONFORM WITH THE REQUIREMENTS OF FDOT SPECIFICATIONS SECTIONS 200 AND 911.
MINIMUM LBR = 100. 3

SUBGRADE:
12" STABILIZED SUBGRADE COMPACTED TO 98% OF MAXIMUM DENSITY (AASHTO T-180); MINIMUM LBR = 40.

1 ON-SITE ASPHALT PAVEMENT DETAIL

SCALE: NOT TO SCALE

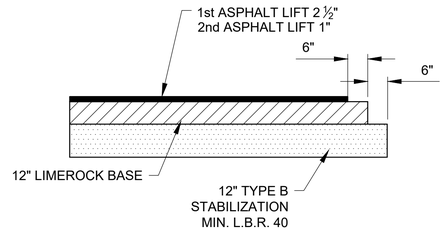

ASPHALTIC CONCRETE VEHICULAR:
FIRST LIFT - 2 ½" FDOT - SP 12.5.
SECOND (FINAL) LIFT - 1" FDOT - FC 9.5 (FINE MIX).
ASPHALT SURFACE COURSE SHALL CONFORM TO THE REQUIREMENTS OF FDOT STANDARDS SPECIFICATIONS SECTIONS 330 AND 334.
SECOND LIFT OF ASPHALT SHALL NOT BE PLACED UNTIL FINAL LANDSCAPE/HARDSCAPE HAS BEEN INSTALLED.

PRIME AND TACK COAT:
LIMEROCK BASE COURSE SHALL CONFORM TO THE REQUIREMENTS OF FDOT STANDARDS SPECIFICATIONS SECTION 300.
APPLICATION RATES:
PRIME COAT - 0.10 GALLONS PER SQ. YD.
TACK COAT - 0.08 GALLONS PER SQ. YD.

BASE:
12" LIMEROCK BASE COMPACTED TO 98% OF MAXIMUM DENSITY (AASHTO T-180), LIMEROCK BASE TO CONFORM WITH THE REQUIREMENTS OF FDOT SPECIFICATIONS SECTIONS 200 AND 911.
MINIMUM LBR = 100.

SUBGRADE:
12" STABILIZED SUBGRADE COMPACTED TO 98% OF MAXIMUM DENSITY (AASHTO T-180); MINIMUM LBR = 40.

1A RIGHT TURN LANE ASPHALT PAVEMENT DETAIL 4

SCALE: NOT TO SCALE

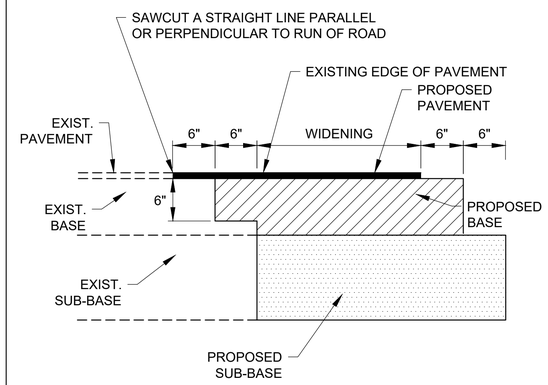

6 SAWCUT / WIDENING DETAIL

SCALE: NOT TO SCALE

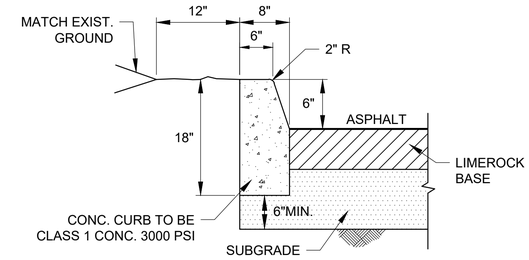

NOTE:
ALL TYPE "D" CURB SHALL BE IN ACCORDANCE WITH THE STANDARD REQUIREMENTS OF FDOT INDEX 300.

4 TYPE 'D' CURB DETAIL

SCALE: NOT TO SCALE

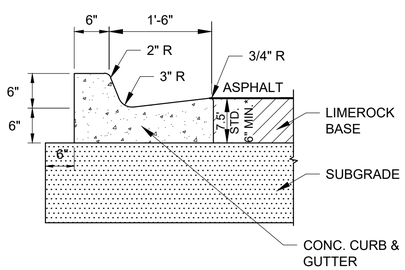

NOTES:
ALL TYPE "F" CURB & GUTTER SHALL BE IN ACCORDANCE WITH THE STANDARD REQUIREMENTS OF FDOT INDEX 300.

*WHEN USED ON HIGH SIDE OF ROADWAYS, THE CROSS SLOPE OF THE GUTTER SHALL MATCH THE CROSS SLOPE OF THE ADJACENT PAVEMENT. THE THICKNESS OF THE LIP SHALL BE 6", UNLESS OTHERWISE SHOWN ON PLANS.

5 TYPE 'F' CURB & GUTTER DETAIL PER FDOT INDEX No. 300

SCALE: NOT TO SCALE

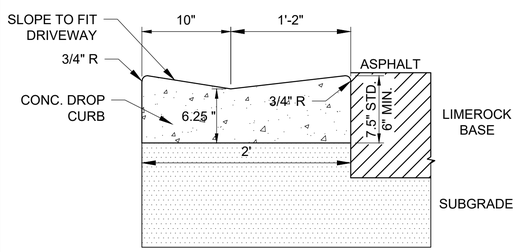

NOTE:
ALL DROP CURB SHALL BE IN ACCORDANCE WITH THE STANDARD REQUIREMENTS OF THE FLORIDA DEPARTMENT OF TRANSPORTATION (FDOT).

5A DROP CURB

SCALE: NOT TO SCALE

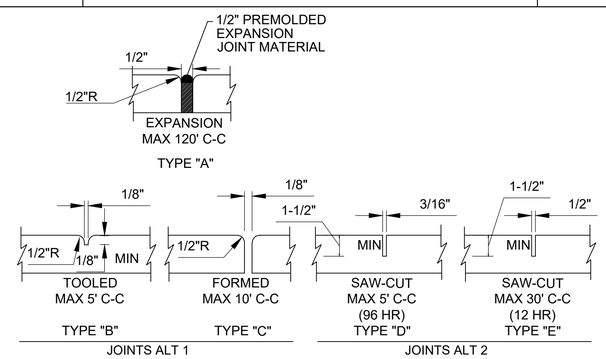

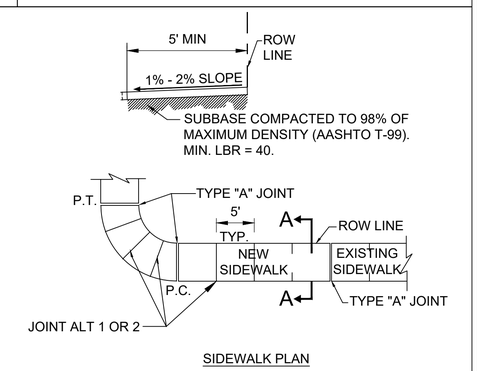

NOTES:
1. Sidewalk construction is to comply with the latest FDOT standards for sidewalks and ADA curb ramps, per FDOT index 304 and 310.
2. Provide either joint alternate 1 or 2. If using joint alternate 2: construct type "E" joints at not more than 30' intervals - within 12 hours after finishing, construct 1/2" expansion, provide joint type "A", with non-rising performed joint filler at not more than 120' intervals, construct remaining joints within 96 hours after finishing.
3. Provide 1/2" expansion joint type "A", with non-rising performed joint filler where concrete pavement abuts concrete curbs, driveways and other fixed objects.
4. Sidewalk thickness shall be 4" thick unless otherwise noted. Thickness shall be 6" through driveways and on all commercial sidewalk applications.
5. The use of steel reinforcement is not permitted.
6. Concrete to be 2,500 psi in 28 days.
7. Cure all concrete with clean sand, plastic membrane or other approved method.
8. Sidewalk foundation shall be compacted to a firm, even surface, true to grade and cross section, and shall be moist at the time concrete is placed.
9. All construction shall conform to local construction codes and standards.
10. Sidewalk slopes shall meet the requirements of the Americans with Disabilities Act. Minimum transverse slope 0.01 ft./ft. And maximum transverse slope 0.02 ft./ft. toward swale or gutter. Longitudinal slope shall conform to ADA requirements.
11. The vertical deviation for a new sidewalk shall not be more than ½".
12. The vertical deviation for a new maintenance access structure cover shall not be more than ¼".
13. Where truncated domes are used, stamped concrete is not permitted.
14. Sidewalk shall have a transverse hair broom finish.

7 SIDEWALK DETAIL

SCALE: NOT TO SCALE

KEITH
Corporate Office
301 East Atlantic Boulevard
Pompano Beach, Florida 33060-6643
(954) 788-3400

Miami-Dade County
2160 NW 82 Avenue
Doral, Florida 33122

Palm Beach County
120 N Federal Highway, Suite 208
Lake Worth, Florida 33460

Orange County
2948 E Livingston Street
Orlando, Florida 32803

State of Florida Certificate of Authorization Number - 7928

BID / CONTRACT NO. :

REVISIONS

NO.	DESCRIPTION	DATE
1	PER DRC COMMENTS	6/8/2017
2	PER DRC COMMENTS	8/24/17
3	PER CITY COMMENTS	12/28/2017
4	PER FDOT COMMENTS	2/7/18

LEDER HILLSBORO STORAGE

SCALE:	AS NOTED
DATE ISSUED:	JANUARY 31, 2018
DRAWN BY:	MG
DESIGNED BY:	MG
CHECKED BY:	SW

STEPHEN D. WILLIAMS, P.E.
FLORIDA REG. NO. 32090
(FOR THE FIRM)

SHEET TITLE
PAVING, GRADING AND DRAINAGE DETAILS

SHEET NUMBER
CP-501

SHEET 12 of 27

PROJECT NO. 09675.00

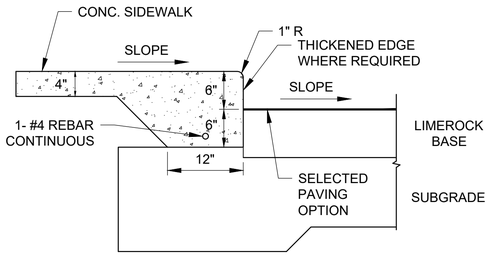

7B THICKENED EDGE SIDEWALK

SCALE: NOT TO SCALE

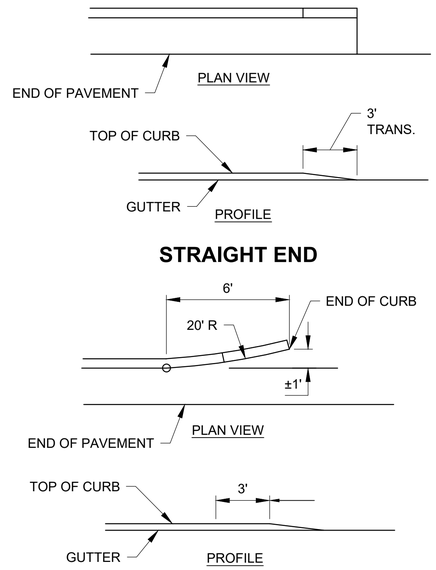

8 CURB & GUTTER FLARED AND STRAIGH ENDS

SCALE: NOT TO SCALE

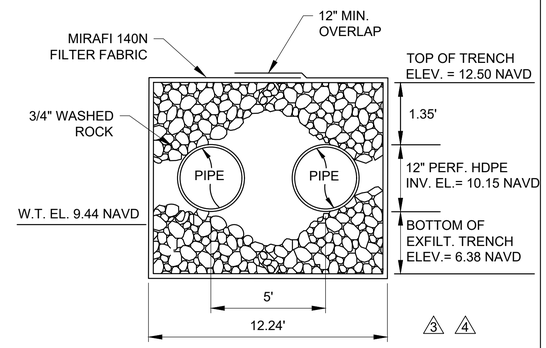

11A EXFILTRATION TRENCH DETAIL SECTION #1

SCALE: NOT TO SCALE

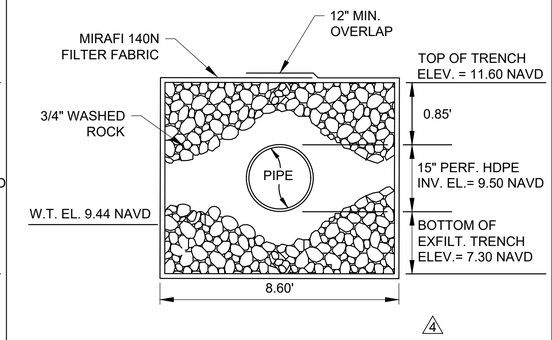

11B EXFILTRATION TRENCH DETAIL SECTION #2

SCALE: NOT TO SCALE

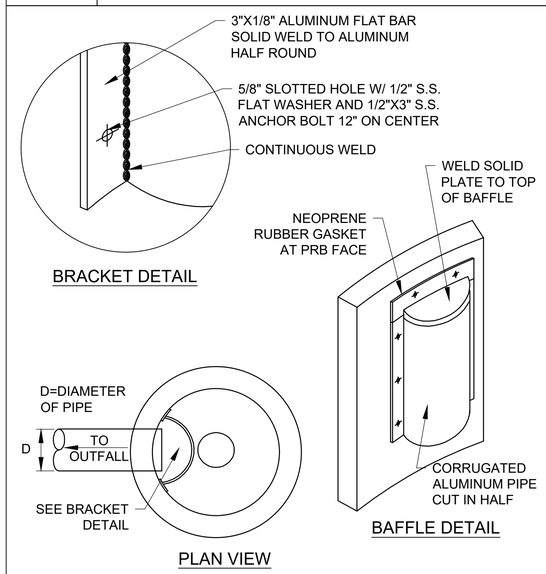

NOTE:
BAFFLE TO BE A SECTION OF CAP CUT IN HALF.
CAP FOR BAFFLE SHALL BE THE NEXT STANDARD
PIPE DIAMETER LARGER THAN THE INFLOW/ OUTFLOW PIPE.

12 POLLUTION RETARDANT BAFFLE DETAIL

SCALE: NOT TO SCALE

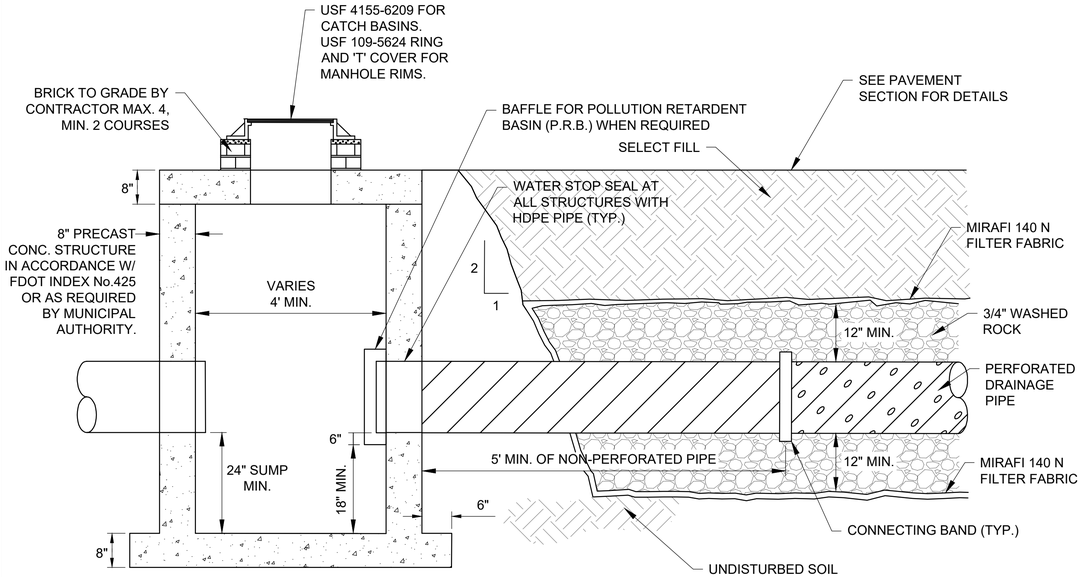

13 CATCH BASIN W/ P.R.B. AND EXFILTRATION TRENCH

SCALE: NOT TO SCALE

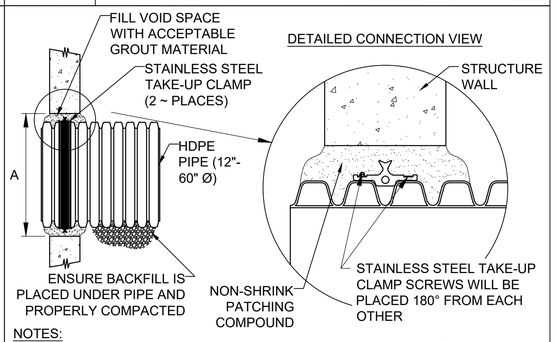

NOTES:
PERFORMANCE HIGHLY DEPENDENT ON INSTALLATION. CONTRACTOR MUST ENSURE MANHOLE GASKET IS UNIFORMLY SEATED AROUND STRUCTURE ADAPTER. EXTRA PRECAUTIONS MUST BE TAKEN TO PREVENT DIFFERENTIAL SETTLEMENT BETWEEN THE PIPE AND MANHOLE.

SEE ADS STANDARD DETAIL STD-201 AND ADS INSTALLATION GUIDE 1.05: WATERSTOP INSTALLATION FOR INSTALLATION RECOMMENDATIONS.

PIPE SIZE	PIPE OD		"A" MIN. HOLE DIA.	MIN. DISTANCE PIPE INVERT TO STRUCTURE INVERT
	A-PROFILE	H-PROFILE		
12"	14.5"	N/A	19.5"	3.7"
15"	17.6"	N/A	23.00"	4.0"
18"	21.2"	N/A	26.50"	4.2"
24"	27.8"	N/A	33.25"	4.5
30"	35.1"	N/A	40.50"	5.2"
36"	41.1"	41.1"	47.00"	5.5"
42"	47.7"	48.0"	53.00"	5.7"
48"	53.6"	54.0"	59.00"	5.7"
60"	66.3"	67.3"	72.00"	6.4"

15 GROUTED MANHOLE CONNECTION (HDPE PIPE) DETAIL

SCALE: NOT TO SCALE

KEITH
Corporate Office
301 East Atlantic Boulevard
Pompano Beach, Florida 33060-6643
(954) 788-3400

Miami-Dade County
2160 NW 82 Avenue
Doral, Florida 33122

Palm Beach County
120 N Federal Highway, Suite 208
Lake Worth, Florida 33460

Orange County
2948 E Livingston Street
Orlando, Florida 32803

State of Florida Certificate of
Authorization Number - 7928

BID / CONTRACT NO. :

REVISIONS

NO.	DESCRIPTION	DATE
1	PER DRC COMMENTS	6/8/2017
2	PER DRC COMMENTS	8/24/17
3	PER BCEPGMD COMMENTS	12/12/2017
4	PER BCEPGMD COMMENTS	6/15/2018

LEDER HILLSBORO STORAGE

SCALE:	AS NOTED
DATE ISSUED:	JANUARY 31, 2018
DRAWN BY:	MG
DESIGNED BY:	MG
CHECKED BY:	SW

STEPHEN D. WILLIAMS, P.E.
FLORIDA REG. NO. 32090
(FOR THE FIRM)

SHEET TITLE

PAVING, GRADING AND DRAINAGE DETAILS

SHEET NUMBER

CP-502

SHEET 13 of 27

PROJECT NO. 09675.00

BCHCED REF. # 180514051

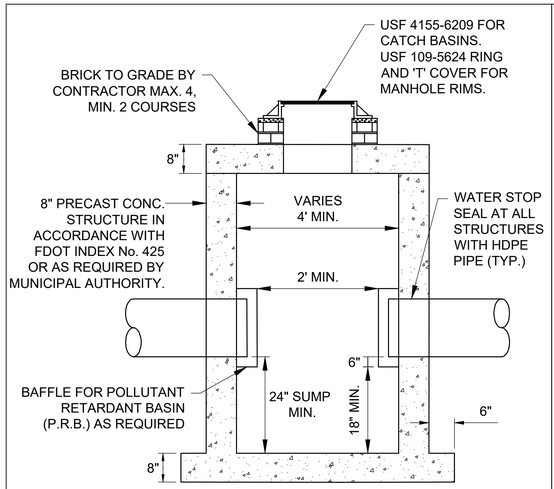

NOTE:
1. STRUCTURE MANUFACTURER AND/OR CONTRACTOR SHALL CONFIRM ALL STEEL REINFORCEMENT MEETS FDOT STANDARDS PER INDEX 200, SECTION 415 AND 425 PRIOR TO SUBMITTING ANY SHOP DRAWINGS FOR APPROVAL.
2. LOCKING GRATES TO BE PROVIDED.

9 CATCH BASIN / DRAINAGE MANHOLE DETAIL

SCALE: NOT TO SCALE

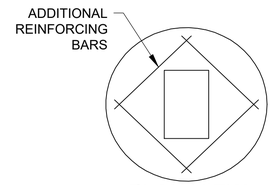

PLAN VIEW
TOP SLAB
FOR CATCH BASINS

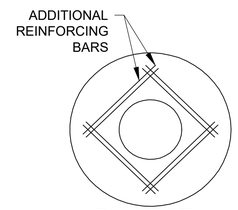

PLAN VIEW
TOP SLAB
FOR MANHOLES

10 CATCH BASIN / MANHOLE FRAME DETAIL

SCALE: NOT TO SCALE

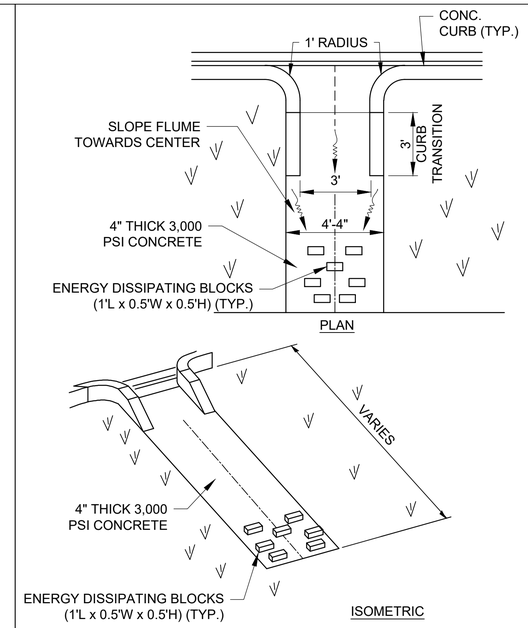

14 CONCRETE FLUME DETAIL

SCALE: NOT TO SCALE

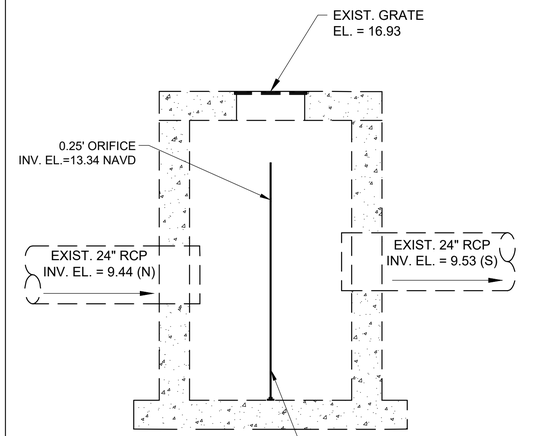

16 EXISTING CONTROL STRUCTURE MODIFICATION DETAIL 3 4

SCALE: NOT TO SCALE

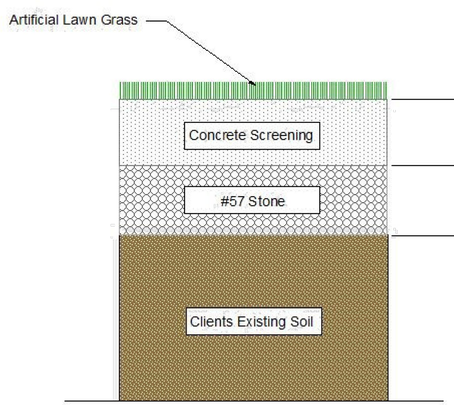

Base - Cross Section
Scale: NTS

SOUTH FLORIDA Putting Greens
A OREGON CONCEPTS
South Florida Putting Greens, LLC
1081 NW 31st. Avenue, Suite A-7, Pompano Beach, FL 33069
954/788-4378 (O) * 954/692-3947 fax

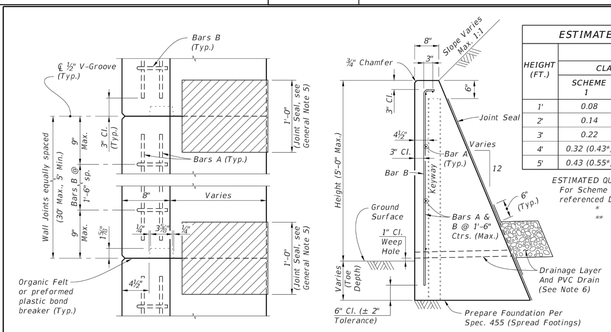

KEYWAY & WALL JOINT DETAIL (TOP VIEW)

TYPICAL SECTION C-I-P CONCRETE GRAVITY WALL

ESTIMATED QUANTITIES FOR C-I-P WALL

HEIGHT (FT.)	PER LINEAR FOOT OF WALL: CLASS NS CONCRETE (CY) SCHEME 1	SCHEME 2	SCHEME 3 **	REINF. STEEL (LB.)	WEEP HOLES & DRAIN REQD.
1'	0.08	0.11 (0.20*)	0.03	3 (4*)	No
2'	0.14	0.20 (0.32*)	0.09	4 (5*)	No
3'	0.22	0.32 (0.47*)	0.29	5 (6*)	Yes
4'	0.32 (0.43*)	0.47 (0.65*)	0.43	6 (7*)	Yes
5'	0.43 (0.55*)	0.65 (0.85*)	0.60	7 (8*)	Yes

ESTIMATED QUANTITIES NOTES:
For Scheme 3 Junction Slab and Traffic Railing see the referenced Design Standards for estimated quantities.
* Quantity for 2'-0" Toe Depth.
** Quantity for Scheme 3 assumes 1'-3" thick coping above Gravity Wall.

GENERAL NOTES

1. C-I-P Gravity Walls constructed as extensions of reinforced concrete retaining walls, except walls of proprietary designs, shall have the same face texture and finish as the reinforced concrete retaining wall.
2. Concrete for Gravity Wall shall be Class NS per Section 347. Concrete for Scheme 3 Junction Slab and Traffic Railing shall be Class II per Section 346, unless otherwise specified in the plans.
3. Reinforcing steel shall meet the requirements of Specification Section 931 (Grade 40 or 60). Smooth or Deformed Welded Wire Reinforcement (WWR) may be substituted on an equal area basis. Do not increase bar/wire spacing for Grade 60 reinforcing steel or WWR.
4. When required, for adjunct guideail, see Index 870 or 880 as appropriate. For adjunct Type B Fence see Index 802.
5. Joint Seal: Organic Felt bond breaker in accordance with Specification Section 400 or Type D-5 geotextile fabric in accordance with Specification Section 985. Mop all contact surfaces of concrete and Organic Felt or geotextile fabric with cut-back asphalt. Stop Organic Felt or geotextile fabric 6" below top of wall.
6. Provide a continuous 1'x1' clean gravel or crushed rock drain for wall heights 3 ft. and higher. Wrap drainage layer as shown, with Type D-3 geotextile fabric in accordance with Specification Section 985. Provide 8"x8" galvanized mesh with ½" openings, at the inside end of the PVC Drain Pipe. Provide 2" Ø PVC Drain Pipe (Sch. 40) at 10 ft. max. spacing (when Drainage Layer is required). Locate outermost edge of Drain Pipe a minimum of 2'-0" from wall joints.
7. Cost of reinforcing steel, face texture, finish, joint seal, drain pipes, drainage layer, galvanized mesh and geotextile fabric to be included in the Contract Unit Price for Concrete Class NS, Gravity Wall. Cost of concrete for Junction Slab in Scheme 3, to be included in Contract Unit Price for Concrete Traffic Railing Barrier With Junction Slab. Adjunct railings or fences to be paid for separately.

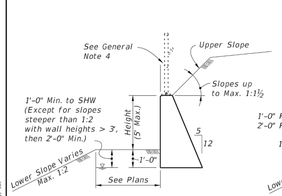

SCHEME 1
(No Traffic Loading Effects & Upper Slopes ≤ 1:1½)

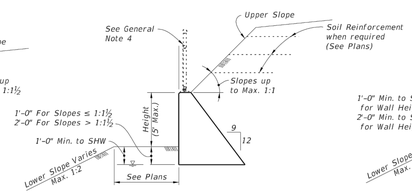

SCHEME 2
(With Traffic Loading or Upper Slopes > 1:1½)

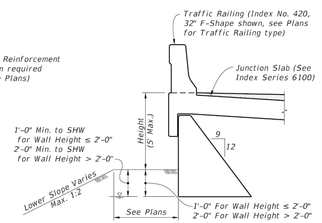

SCHEME 3
(With Traffic Railing)

BILL OF REINFORCING STEEL

MARK	SIZE	LENGTH
A	4	As Reqd.
B	4	As Reqd.

BAR BENDING DIAGRAM

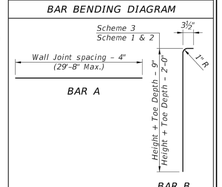

NOTES:
1. All bar dimensions are out to out.
2. Lap splices for Bars A must be a minimum of 1'-10".

LAST REVISION	REVISION	DESCRIPTION:			INDEX NO.	SHEET NO.
11/01/16			FY 2017-18 DESIGN STANDARDS	3 GRAVITY WALL	6011	1 of 1

KEITH
Corporate Office
301 East Atlantic Boulevard
Pompano Beach, Florida 33060-6643
(954) 788-3400

Miami-Dade County
2160 NW 82 Avenue
Doral, Florida 33122

Palm Beach County
120 N Federal Highway, Suite 208
Lake Worth, Florida 33460

Orange County
2948 E Livingston Street
Orlando, Florida 32803

State of Florida Certificate of Authorization Number - 7928

BID / CONTRACT NO. :

REVISIONS

NO.	DESCRIPTION	DATE
1	PER DRC COMMENTS	6/8/2017
2	PER DRC COMMENTS	8/24/17
3	PER BCEPGMD COMMENTS	4/2/18
4	PER BCEPGMD COMMENTS	6/15/18

LEDER HILLSBORO STORAGE

SCALE:	AS NOTED
DATE ISSUED:	JANUARY 31, 2018
DRAWN BY:	MG
DESIGNED BY:	MG
CHECKED BY:	SW

STEPHEN D. WILLIAMS, P.E.
FLORIDA REG. NO. 32090
(FOR THE FIRM)

SHEET TITLE
PAVING, GRADING AND DRAINAGE DETAILS

SHEET NUMBER
CP-503

SHEET 14 of 27

PROJECT NO. 09675.00

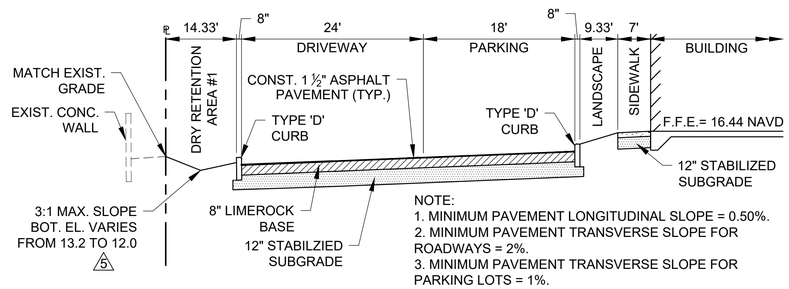

NOTE:
1. MINIMUM PAVEMENT LONGITUDINAL SLOPE = 0.50%.
2. MINIMUM PAVEMENT TRANSVERSE SLOPE FOR ROADWAYS = 2%.
3. MINIMUM PAVEMENT TRANSVERSE SLOPE FOR PARKING LOTS = 1%.

3 SECTION A-A
N.T.S.

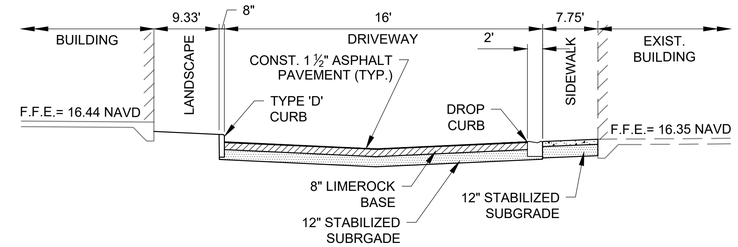

3 SECTION D-D
N.T.S.

NOTE:
1. MINIMUM PAVEMENT LONGITUDINAL SLOPE = 0.50%.
2. MINIMUM PAVEMENT TRANSVERSE SLOPE FOR ROADWAYS = 2%.
3. MINIMUM PAVEMENT TRANSVERSE SLOPE FOR PARKING LOTS = 1%.

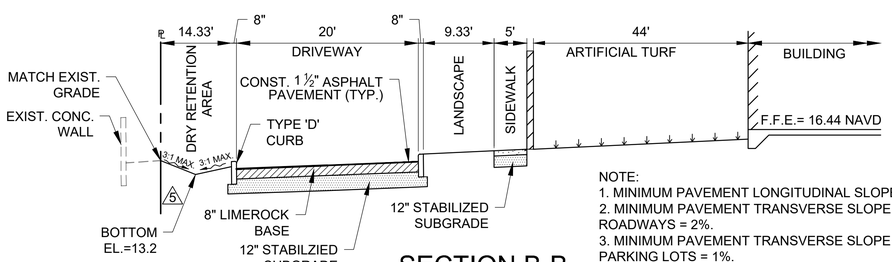

NOTE:
1. MINIMUM PAVEMENT LONGITUDINAL SLOPE = 0.50%.
2. MINIMUM PAVEMENT TRANSVERSE SLOPE FOR ROADWAYS = 2%.
3. MINIMUM PAVEMENT TRANSVERSE SLOPE FOR PARKING LOTS = 1%.

3 SECTION B-B
N.T.S.

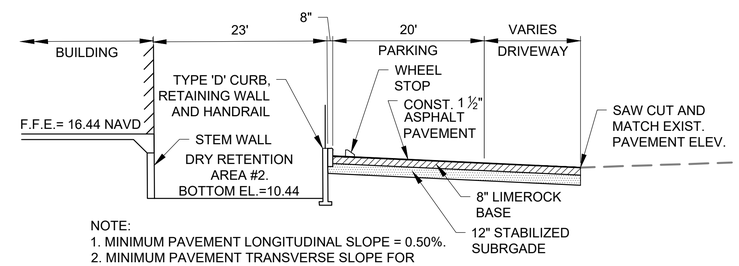

NOTE:
1. MINIMUM PAVEMENT LONGITUDINAL SLOPE = 0.50%.
2. MINIMUM PAVEMENT TRANSVERSE SLOPE FOR ROADWAYS = 2%.
3. MINIMUM PAVEMENT TRANSVERSE SLOPE FOR PARKING LOTS = 1%.

3 SECTION E-E
N.T.S.

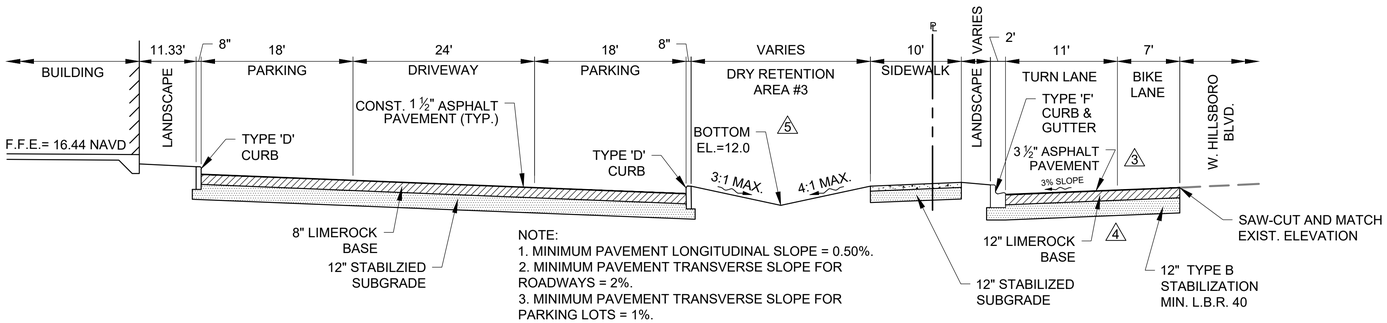

NOTE:
1. MINIMUM PAVEMENT LONGITUDINAL SLOPE = 0.50%.
2. MINIMUM PAVEMENT TRANSVERSE SLOPE FOR ROADWAYS = 2%.
3. MINIMUM PAVEMENT TRANSVERSE SLOPE FOR PARKING LOTS = 1%.

3 SECTION C-C
N.T.S.

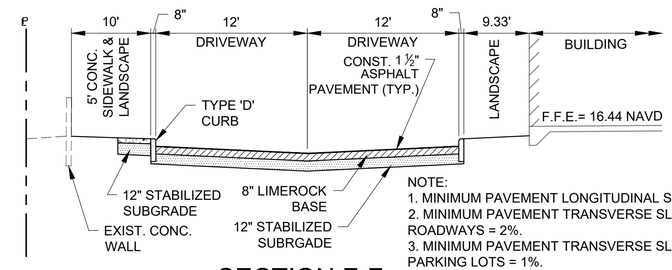

NOTE:
1. MINIMUM PAVEMENT LONGITUDINAL SLOPE = 0.50%.
2. MINIMUM PAVEMENT TRANSVERSE SLOPE FOR ROADWAYS = 2%.
3. MINIMUM PAVEMENT TRANSVERSE SLOPE FOR PARKING LOTS = 1%.

3 SECTION F-F
N.T.S.

KEITH
Corporate Office
301 East Atlantic Boulevard
Pompano Beach, Florida 33060-6643
(954) 788-3400

Miami-Dade County
2160 NW 82 Avenue
Doral, Florida 33122

Palm Beach County
120 N Federal Highway, Suite 208
Lake Worth, Florida 33460

Orange County
2948 E Livingston Street
Orlando, Florida 32803

State of Florida Certificate of Authorization Number - 7928

BID / CONTRACT NO. :

REVISIONS

NO.	DESCRIPTION	DATE
1	PER DRC COMMENTS	6/8/2017
2	PER DRC COMMENTS	8/24/17
3	PER CITY COMMENTS	12/28/2017
4	PER FDOT COMMENTS	2/7/18
5	PER BCEPGMD COMMENTS	6/15/18

LEDER HILLSBORO STORAGE

SCALE:	AS NOTED
DATE ISSUED:	JANUARY 31, 2018
DRAWN BY:	MG
DESIGNED BY:	MG
CHECKED BY:	SW

STEPHEN D. WILLIAMS, P.E.
FLORIDA REG. NO. 32090
(FOR THE FIRM)

SHEET TITLE
PAVING, GRADING AND DRAINAGE DETAILS

SHEET NUMBER
CP-504

SHEET 15 of 27

PROJECT NO. 09675.00

Drawing name: N:\09\09675.00 - Pet Lodge - Leder Group\Engineering\Cad\09675.00-CP-504.dwg Layout Name: CP-504 Plotted by: MGontarek Plotted on: Jun 20, 2018 - 8:03am

C-1 DRAINAGE OVER SEWER
PROP. FINISHED GRADE = 14.39
BOTTOM 12" HDPE = 10.15
TOP 6" PVC = UNKNOWN
CLEARANCE = TBD (0.50' MIN.)

C-2 DRAINAGE OVER SEWER
PROP. FINISHED GRADE = 14.49
BOTTOM 12" HDPE = 10.15
TOP 6" PVC = UNKNOWN
CLEARANCE = TBD (0.50' MIN.)

C-3 DEFLECT WATER UNDER DRAINAGE W/ 45° BENDS
PROP. FINISHED GRADE = 14.21
BOTTOM 12" HDPE = 10.15
TOP 6" DIP = 8.65
CLEARANCE = 1.50'

C-4 DEFLECT WATER UNDER DRAINAGE W/ 45° BENDS
PROP. FINISHED GRADE = 14.31
BOTTOM 12" HDPE = 10.15
TOP 6" DIP = 8.65
CLEARANCE = 1.50'

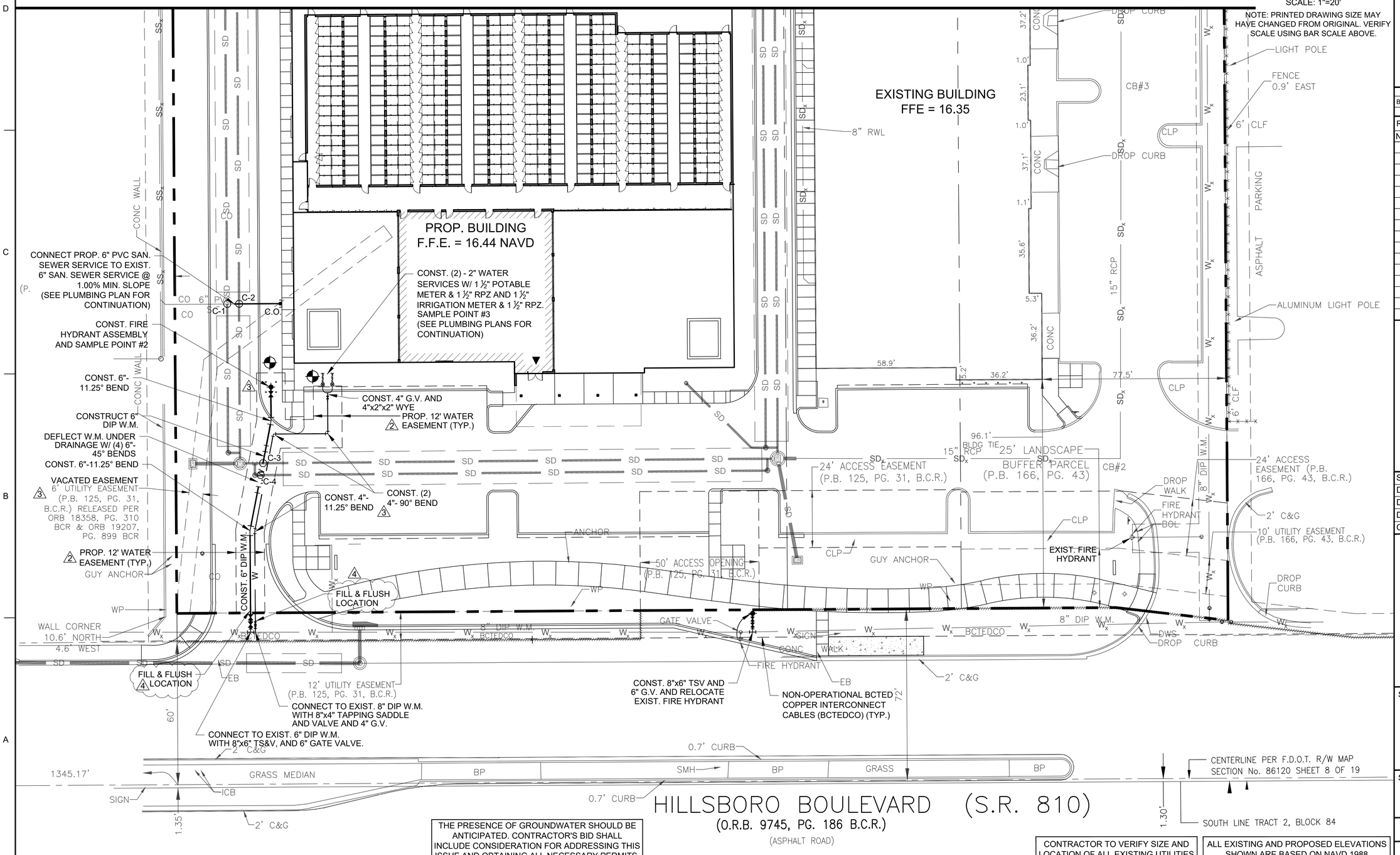

THE PRESENCE OF GROUNDWATER SHOULD BE ANTICIPATED. CONTRACTOR'S BID SHALL INCLUDE CONSIDERATION FOR ADDRESSING THIS ISSUE AND OBTAINING ALL NECESSARY PERMITS.

CONTRACTOR TO VERIFY SIZE AND LOCATION OF ALL EXISTING UTILITIES

ALL EXISTING AND PROPOSED ELEVATIONS SHOWN ARE BASED ON NAVD 1988

N

GRAPHIC SCALE
0 20 40
SCALE: 1"=20'

NOTE: PRINTED DRAWING SIZE MAY HAVE CHANGED FROM ORIGINAL. VERIFY SCALE USING BAR SCALE ABOVE.

KEITH & ASSOCIATES, INC.
consulting engineers
301 East Atlantic Boulevard
Pompano Beach, Florida 33060-6643
2160 NW 82nd Avenue
Doral, Florida 33122
P: (954) 788-3400 F: (954) 788-3500
Florida Certificate of Authorization # - 7928

BID / CONTRACT NO. :

REVISIONS

NO.	DESCRIPTION	DATE
1	PER DRC COMMENTS	6/8/2017
2	PER DRC COMMENTS	8/24/17
3	PER CITY COMMENTS	12/28/2017
4	PER CITY COMMENTS	5/21/2018

LEDER HILLSBORO STORAGE

SCALE:	AS NOTED
DATE ISSUED:	JANUARY 31, 2018
DRAWN BY:	MG
DESIGNED BY:	MG
CHECKED BY:	SW

STEPHEN D. WILLIAMS, P.E.
FLORIDA REG. NO. 32090
(FOR THE FIRM)

SHEET TITLE

WATER AND SEWER PLAN

SHEET NUMBER

CU-101

SHEET 16 of 27

PROJECT NO. 09675.00

Drawing name: N:\09\09675.00 - Pet Lodge - Leder Group\Engineering\Cadd\09675.00-CU-101XX.dwg Layout Name: CU-101 Plotted by: MGrimbank Plotted on: Jun 15, 2018 - 10:10am

N.W. 71ST STREET
(P.B. 2, PG. 53, P.B.C.R.)

12' UTILITY EASEMENT (ORB 35294, PG 1996)
8" DIP W.M.
DIRT DRIVE
GRAVEL DRIVE
8" PVC S.S.
ASPHALT
DMH#12
DMH#11
CONC WALK
SMH#16
SMH#17
SMH#15
CB#14
FIRE HYDRANT
GATE VALVE IN CONC
10' UTILITY EASEMENT (P.B. 166, PG. 43, B.C.R.)
SOUTH RIGHT OF WAY LINE
CONC WALL
GATE
CLP
24" RCP
WATER METER
BFP
BOL(2)
CONST. 2" POTABLE WATER SERVICE W/ 2" METER AND RPZ
CONNECT TO EXIST. 8" DIP W.M. WITH 8"x2" TAPPING SADDLE AND CORPORATION STOP
CONNECT PROP. 8" DIP W.M. TO EXIST. 8" DIP W.M. W/ 8"x8" TS&V, 8" GATE VALVE AND 8"-45° BEND
CONNECT (2)-6" SAN. SEWER SERVICE TO EXIST. PVC SAN. SEWER WITH (2) WYE CONNECTIONS
EXIST. FIRE HYDRANT
FILL & FLUSH LOCATION
PROP. 12' SEWER EASEMENT (TYP.)
PROP. 12' WATER EASEMENT (TYP.)
C-5
C-6
C-7
C-8
C-9
C.O.
CONST. 37 LF-6" PVC SAN. SEWER SERVICE W/ CLEAN OUT @ 1.00% MIN. SLOPE INV. EL. = 6.50 (N) (SEE PLUMBING PLANS FOR CONTINUATION)
CONST. WALL MOUNTED FDC (SEE PLUMBING PLANS FOR CONTINUATION)
CONST. SMH AND CONNECT TO EXIST. SAN. SEWER RIM EL.=15.16 EX. INV. EL.=5.94(N) INV. EL.=6.04(E)
CONST. 8" FIRE SERVICE W/ 8" BACKFLOW PREVENTER AND SAMPLE POINT #1 (SEE PLUMBING PLANS FOR CONTINUATION)
EXIST. 12' UTILITY EASEMENT TO BE VACATED (TYP.)
RELOCATE EXIST. WATER METER & RPZ
CONST. 148 LF-6" SAN. SEWER @ 1.00% MIN. SLOPE. CONNECT TO EXIST. 6" SAN. SEWER LATERAL AT EXIST. CLEANOUT EXIST. CLEANOUT INV. EL. = ±8.33
8" RWL
PROP. BUILDING F.F.E. = 16.44 NAVD
1 STORY (HIGH CEILING) BUILDING #4171 F.F. EL.=16.35'
EXISTING BUILDING FFE = 16.35
CONC SLAB
TRANSFORMER ON CONC
CB#4
DWS(TYP)
ICB
EXIST. FIRE HYDRANT
10' UTILITY EASEMENT (P.B. 126, PG. 22, B.C.R.)
12' UTILITY EASEMENT (ORB 35294, PG 1996)
SMH
MATCH LINE-SEE SHEET CU-102

N

GRAPHIC SCALE
0 20 40
SCALE: 1"=20'

NOTE: PRINTED DRAWING SIZE MAY HAVE CHANGED FROM ORIGINAL. VERIFY SCALE USING BAR SCALE ABOVE.

C-5 DRAINAGE OVER SEWER
PROP. FINISHED GRADE = 14.98
BOTTOM 18" HDPE = 9.50
TOP EXIST. 8" PVC = 5.88
CLEARANCE = 3.62'

C-6 WATER OVER DRAINAGE
PROP. FINISHED GRADE = 14.56
BOTTOM 8" DIP = 11.56
TOP 18" HDPE = 11.00
CLEARANCE = 0.56'

C-7 WATER OVER SEWER
PROP. FINISHED GRADE = 14.84
BOTTOM 8" DIP = 11.17
TOP 6" PVC = 7.14
CLEARANCE = 4.03'

C-8 DRAINAGE OVER SEWER
PROP. FINISHED GRADE = 14.75
BOTTOM 18" HDPE = 9.50
TOP 6" PVC = 7.32
CLEARANCE = 2.18'

C-9 DRAINAGE OVER SEWER
PROP. FINISHED GRADE = 14.72
BOTTOM 18" HDPE = 9.50
TOP 6" PVC = 7.36
CLEARANCE = 2.14'

THE PRESENCE OF GROUNDWATER SHOULD BE ANTICIPATED. CONTRACTOR'S BID SHALL INCLUDE CONSIDERATION FOR ADDRESSING THIS ISSUE AND OBTAINING ALL NECESSARY PERMITS.

CONTRACTOR TO VERIFY SIZE AND LOCATION OF ALL EXISTING UTILITIES

ALL EXISTING AND PROPOSED ELEVATIONS SHOWN ARE BASED ON NAVD 1988

KEITH & ASSOCIATES, INC.
consulting engineers
301 East Atlantic Boulevard
Pompano Beach, Florida 33060-6643
2160 NW 82nd Avenue
Doral, Florida 33122
P: (954) 788-3400 F: (954) 788-3500
Florida Certificate of Authorization # - 7928

BID / CONTRACT NO. :

REVISIONS

NO.	DESCRIPTION	DATE
1	PER DRC COMMENTS	6/8/2017
2	PER DRC COMMENTS	8/24/17
3	PER CITY COMMENTS	12/28/2017
4	PER CITY COMMENTS	5/21/2018

LEDER HILLSBORO STORAGE

SCALE:	AS NOTED
DATE ISSUED:	JANUARY 31, 2018
DRAWN BY:	MG
DESIGNED BY:	MG
CHECKED BY:	SW

STEPHEN D. WILLIAMS, P.E.
FLORIDA REG. NO. 32090
(FOR THE FIRM)

SHEET TITLE
WATER AND SEWER PLAN

SHEET NUMBER
CU-102

SHEET 17 of 26

PROJECT NO. 09675.00

Drawing name: N:\09\09675.00 - Pet Lodge - Leder Group\Engineering\Cad\09675.00-CU-1XX.dwg Layout Name: CU-102 Plotted by: MGinnbank Plotted on: Jun 04, 2018 - 12:24pm

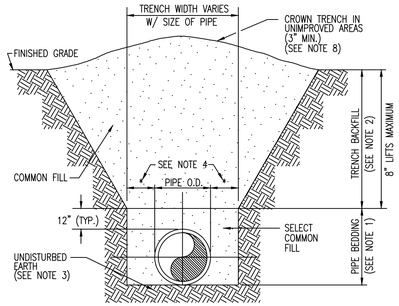

NOTES:

1. PIPE BEDDING: SELECT COMMON FILL COMPACTED TO 100% OF THE MAXIMUM DENSITY AS PER AASHTO T-99-C.
2. TRENCH BACKFILL: COMMON FILL COMPACTED TO 100% OF THE MAXIMUM DENSITY AS PER AASHTO T-99-C.
3. PIPE BEDDING UTILIZING SELECT COMMON FILL OR BEDDING ROCK IN ACCORDANCE WITH TYPE A BEDDING AND TRENCHING DETAIL MAY BE REQUIRED AS DIRECTED BY THE CITY OF COCONUT CREEK.
4. (*): 15" MAX. FOR PIPE DIAMETER LESS THAN 24", AND 24" MAX. FOR PIPE DIAMETER 24" AND LARGER.
5. WATER SHALL NOT BE PERMITTED IN THE TRENCH DURING CONSTRUCTION.
6. ALL PIPE TO BE INSTALLED WITH BELL FACING UPSTREAM TO THE DIRECTION OF THE FLOW.
7. REFER TO SECTION 2.18-E OF THE MANUAL FOR SHEETING AND BRACING IN EXCAVATIONS.
8. FINAL RESTORATION IN IMPROVED AREAS SHALL BE IN COMPLIANCE WITH ALL APPLICABLE REGULATIONS OF GOVERNING AGENCIES. SURFACE RESTORATION WITHIN CITY OR COUNTY RIGHT-OF-WAY SHALL COMPLY WITH THE APPLICABLE REGULATIONS.

CITY OF COCONUT CREEK
UTILITIES AND ENGINEERING DEPARTMENT

TYPE B BEDDING AND TRENCHING DETAIL

Date	Revisions	Appr. by	Date: Nov. 1999	Scale: N.T.S.	Dwg: F010	Fig: 010

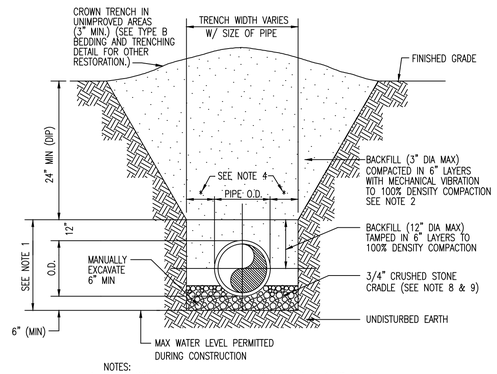

NOTES:

1. PIPE BEDDING: SELECT COMMON FILL COMPACTED TO 100% OF THE MAXIMUM DENSITY AS PER AASHTO T-99-C.
2. TRENCH BACKFILL: COMMON FILL COMPACTED TO 100% OF THE MAXIMUM DENSITY AS PER AASHTO T-99-C.
3. USE TYPE A BEDDING TO BE DETERMINED IN THE FIELD AS DIRECTED BY THE CITY OF COCONUT CREEK.
4. (*): 15" MAX. FOR PIPE DIAMETER LESS THAN 24", AND 24" MAX. FOR PIPE DIAMETER 24" AND LARGER.
5. WATER SHALL NOT BE PERMITTED IN THE TRENCH DURING CONSTRUCTION.
6. ALL PIPE TO BE INSTALLED WITH BELL FACING UPSTREAM TO THE DIRECTION OF THE FLOW.
7. REFER TO SECTION 2.18-E OF THE MANUAL FOR SHEETING AND BRACING IN EXCAVATIONS.
8. GRAVITY SEWERS SHALL UTILIZE TYPE A BEDDING, IF REQUIRED BY THE CITY. BEDDING DEPTH SHALL BE 6" MINIMUM FOR ANY DIAMETER PIPE.
9. DEPTH FOR REMOVAL OF UNSUITABLE MATERIAL SHALL GOVERN DEPTH OF BEDDING ROCK BELOW THE PIPE. APPLICABLE GOVERNING AGENCY SHALL DETERMINE IN THE FIELD REQUIRED REMOVAL OF UNSUITABLE MATERIAL TO REACH SUITABLE FOUNDATION.

CITY OF COCONUT CREEK
UTILITIES AND ENGINEERING DEPARTMENT

TYPE A BEDDING AND TRENCHING DETAIL

Date	Revisions	Appr. by	Date: Nov. 1999	Scale: N.T.S.	Dwg: F020	Fig: 020

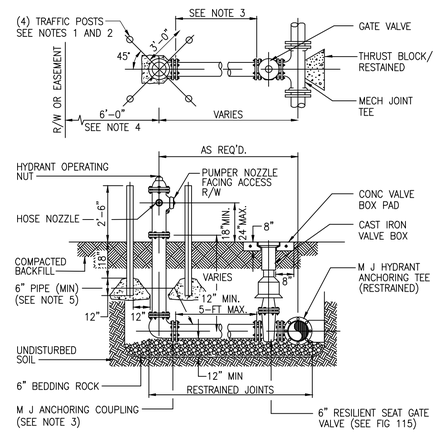

NOTES:

1. HYDRANT GUARDS TO BE 4" DIAMETER GALVANIZED STEEL PIPE FILLED WITH CONCRETE AND TO BE PLACED AT LOCATION AS REQUESTED BY THE CITY ENGINEER.
2. OMIT REAR GUARDS IN LOCATION WHERE SIDEWALKS EXIST.
3. USE MECHANICAL JOINT RETAINER GLAND CLOW MODEL NO. F1058 OR APPROVED EQUAL.
4. HYDRANT SETBACK SHALL BE SET TO A DISTANCE OF 7-FT MAXIMUM AND 4-FT MINIMUM FROM THE EDGE OF PAVEMENT OR CONFORM TO D.O.T. REQUIREMENTS WHERE APPLICABLE.
5. SERVICE LINES FOR FIRE HYDRANTS TO BE SIZED TO ALLOW A MINIMUM OF 20 PSI RESIDUAL PRESSURE AT THE HYDRANT UNDER FIRE FLOW CONDITIONS.
6. TWO BLUE REFLECTIVE PAVEMENT MARKERS FOR IDENTIFICATION OF THE HYDRANT AND ITS VALVE LOCATION SHALL BE INSTALLED ON THE CENTER OF THE ADJACENT PAVED DRIVE LANE TO THE HYDRANT; MARKERS SHALL BE SPACED 1-FT APART, PERPENDICULAR TO THE ROAD CENTERLINE.

CITY OF COCONUT CREEK
UTILITIES AND ENGINEERING DEPARTMENT

FIRE HYDRANT ASSEMBLY DETAIL

Date	Revisions	Appr. by	Date: Nov. 1999	Scale: N.T.S.	Dwg: F103	Fig: 103

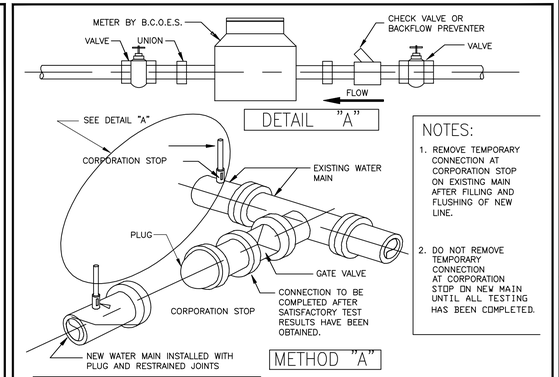

NOTES:

1. REMOVE TEMPORARY CONNECTION AT CORPORATION STOP ON EXISTING MAIN AFTER FILLING AND FLUSHING OF NEW LINE.
2. DO NOT REMOVE TEMPORARY CONNECTION AT CORPORATION STOP ON NEW MAIN UNTIL ALL TESTING HAS BEEN COMPLETED.

NOTES:

1. REMOVE TEMPORARY CONNECTION AT CORPORATION STOPS ON NEW MAIN AFTER FILING AND FLUSHING HAS BEEN COMPLETED.

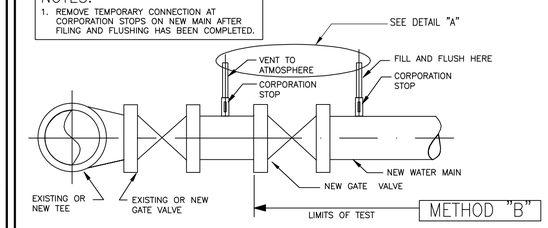

CITY OF COCONUT CREEK
UTILITIES AND ENGINEERING DEPARTMENT

FILLING AND FLUSHING DETAIL

Date	Revisions	Appr. by	Date: Nov. 1999	Scale: N.T.S.	Dwg: F104	Fig: 104

A CORPORATION STOP SHALL BE INSTALLED WITH A LENGTH OF COPPER TUBING EXTENDING ABOVE THE GROUND. THE TUBING SHALL BE INSTALLED WITH A 180° BEND AND A VALVE.

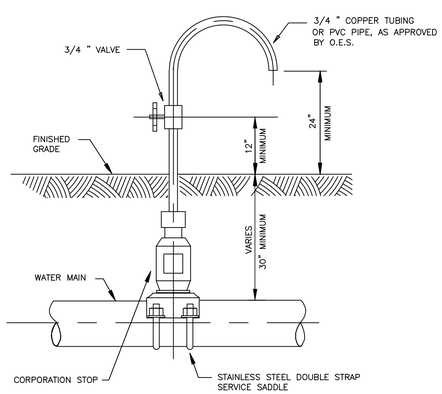

NOTES:

SAMPLING POINTS SHALL BE LOCATED AND LATER REMOVED AS REQUIRED BY BROWARD COUNTY HEALTH DEPARTMENT. CORPORATION STOP SHALL BE REMOVED AND SADDLE PLUGGED WITH A BRASS FITTING.

CITY OF COCONUT CREEK
UTILITIES AND ENGINEERING DEPARTMENT

BACTERIOLOGICAL DETAIL

Date	Revisions	Appr. by	Date: Nov. 1999	Scale: N.T.S.	Dwg: F106	Fig: 106

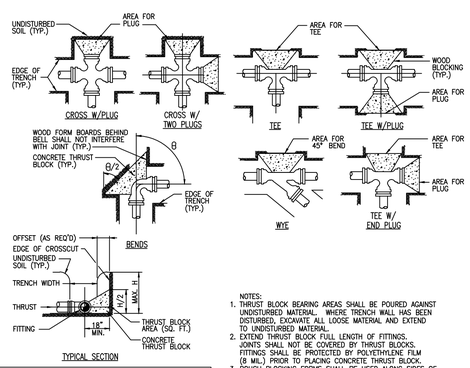

SCHEDULE FOR THRUST BLOCK AREAS *

PIPE SIZE (INCHES)	90 BEND (SQ FT)	45 BEND (SQ FT)	22-1/2 BEND (SQ FT)	11-1/4 BEND (SQ FT)	TEE & PLUG (SQ FT)	DESIGN PRESS (PSI)
4						150
6						150
8						150
10						150
12						150
14						150
16						150
18						150
20						150
24						150

NOTE: THRUST BLOCK AREAS TO BE COMPUTED ON BASIS OF _____ (1,500 MIN) LBS. PER SQ. FT. SOIL RESTRAINT SEE NOTE 5 BEARING.
* TO BE COMPLETED BY ENGINEER.

NOTES:

1. THRUST BLOCK BEARING AREAS SHALL BE POURED AGAINST UNDISTURBED MATERIAL. WHERE TRENCH WALL HAS BEEN DISTURBED, EXCAVATE ALL LOOSE MATERIAL AND EXTEND TO UNDISTURBED MATERIAL.
2. EXTEND THRUST BLOCK FULL LENGTH OF FITTINGS. JOINTS SHALL NOT BE COVERED BY THRUST BLOCKS. FITTINGS SHALL BE PROTECTED BY POLYETHYLENE FILM (8 MIL.) PRIOR TO PLACING CONCRETE THRUST BLOCK.
3. ROUGH BLOCKING FORMS SHALL BE USED ALONG SIDES OF THRUST BLOCKS, AS REQUIRED.
4. THRUST BLOCKS SHALL BE USED IN COMBINATION, AS REQUIRED, TO SUIT THE SPECIFIC FITTING ARRANGEMENT.
5. ALTERNATE DESIGNED RESTRAINING SYSTEMS SHALL BE PROVIDED WHERE STANDARD THRUST BLOCKING IS NOT SUITABLE AND/OR SOIL RESISTANCE BEARING IS LESS THAN 1500 PSF.
6. ALL WOOD BLOCKING SHALL BE PRESSURE TREATED WITH PRESERVATIVE.
7. RESTRAINT: ALL FITTINGS AND PIPE JOINTS 8" OR SMALLER MAY BE RESTRAINED USING THRUST BLOCKS. ALL OTHERS MUST BE RESTRAINED AS FOLLOWS:

JOINT	RESTRAINT
PUSH-ON PVC	EBBA IRON SERIES 2800 HARNESS
PUSH-ON DIP	TR-FLEX BY U.S. PIPE OR FLEX RING BY AMERICAN
FITTINGS WITH DIP	EBBA IRON SERIES 1100 MEGALUG
FITTINGS WITH PVC	EBBA IRON SERIES 2000 MEGALUG

8. SOIL TYPE: GOOD SAND
9. LAYING CONDITIONS: TYPE 2, STANDARD ANSI/AWWA C150/A21.50
10. HYDROSTATIC TEST PRESSURE: 150 PSI
11. DEPTH OF COVER: 2.5 FT.
12. LENGTHS LISTED HERE ARE BASED ON CLASS 50 D.I.P.

CITY OF COCONUT CREEK
UTILITIES AND ENGINEERING DEPARTMENT

THRUST BLOCK DETAIL

Date	Revisions	Appr. by	Date: Nov 1999	Scale: N.T.S.	Dwg: F107	Fig: 107

MINIMUM LENGTH (FT) TO BE RESTRAINED ON EACH SIDE OF FITTING(S). *

	PIPE SIZE								
	6"	8"	10"	12"	16"	20"	24"	30"	36"
90° BEND									
45° BEND									
22-1/2° BEND									
11-1/4° BEND									
PLUG OR BRANCH OF TEE									

* SEE NOTE 7.

NOTES:

1. FITTINGS SHALL BE RESTRAINED JOINTS UNLESS OTHERWISE INDICATED.
2. INSTALL FULL LENGTH JOINTS WITH TOTAL LENGTH EQUAL TO OR GREATER THAN SHOWN IN THE TABLE.
3. WHERE TWO OR MORE FITTINGS ARE TOGETHER, USE FITTING WHICH YIELDS GREATEST LENGTH OF RESTRAINED PIPE.
4. IN LINE VALVES AND THROUGH RUN OF TEES OUTSIDE LIMITS OF RESTRAINED JOINTS FROM OTHER FITTINGS NEED NOT BE RESTRAINED UNLESS OTHERWISE INDICATED.
5. LENGTHS SHOWN IN THE TABLE HAVE BEEN CALCULATED IN ACCORDANCE WITH THE PROCEDURE OUTLINED IN "THRUST RESTRAINT DESIGN FOR DUCTILE IRON PIPE" AS PUBLISHED BY DIPRA, WITH THE FOLLOWING ASSUMPTIONS:

   WORKING PRESSURE: _____ P.S.I.*
   SOIL DESIGNATION: _____ *
   LAYING CONDITIONS: _____ *

6. FOR PIPE ENCASED IN POLYETHYLENE, USE VALUES GIVEN IN PARENTHESES OR INCREASE THE GIVEN VALUE BY A FACTOR OF 1.5.
7. TO BE COMPLETED BY THE DESIGN ENGINEER.

CITY OF COCONUT CREEK
UTILITIES AND ENGINEERING DEPARTMENT

RESTRAINED PIPE DETAIL

Date	Revisions	Appr. by	Date: Nov 1999	Scale: N.T.S.	Dwg: F108	Fig: 108

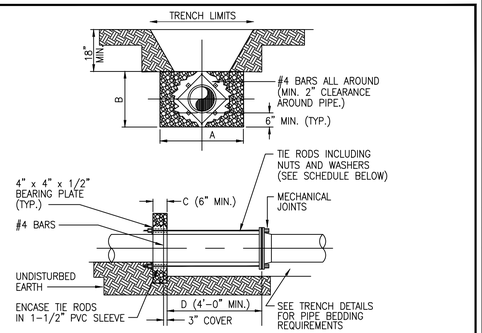

SCHEDULE OF DIMENSIONS AND MATERIALS *

PIPE SIZE (INCHES)	DIMENSIONS				TIE RODS REQ'D	
	A	B	C	D	DIA.	NO.

NOTE: THRUST BLOCK AREAS TO BE COMPUTED ON BASIS OF _____ (1,500 MIN) LBS. PER SQ. FT. SOIL RESTRAINT SEE NOTE 5 BEARING.
* TO BE COMPLETED BY ENGINEER.

NOTES:

1. ADDITIONAL REINFORCEMENTS SHALL BE AS SPECIFIED BY THE ENGINEER.
2. MINIMUM COMPRESSIVE STRENGTH FOR CONCRETE SHALL BE 2500 PSI.
3. BEDDING, BACKFILL, AND COMPACTION SHALL BE AS SPECIFIED ELSEWHERE IN THE STANDARD DRAWINGS.
4. ALL FORM BOARDS SHALL BE REMOVED PRIOR TO BACKFILL.
5. NO ALLOWANCE SHALL BE MADE FOR FRICTION BETWEEN THE PIPE WALL AND THE THRUST COLLAR.
6. DESIGN PRESSURE:_____ P.S.I.*

CITY OF COCONUT CREEK
UTILITIES AND ENGINEERING DEPARTMENT

WATER MAIN THRUST COLLAR DETAIL

Date	Revisions	Appr. by	Date: Nov 1999	Scale: N.T.S.	Dwg: F109	Fig: 109

KEITH & ASSOCIATES, INC.
consulting engineers
301 East Atlantic Boulevard
Pompano Beach, Florida 33060-6643
2160 NW 82nd Avenue
Doral, Florida 33122
P: (954) 788-3400 F: (954) 788-3500
Florida Certificate of Authorization # - 7928

BID / CONTRACT NO. :

REVISIONS

NO.	DESCRIPTION	DATE
1	PER DRC COMMENTS	6/8/2017
2	PER DRC COMMENTS	8/24/17

LEDER HILLSBORO STORAGE

SCALE:	AS NOTED
DATE ISSUED:	JANUARY 31, 2018
DRAWN BY:	MG
DESIGNED BY:	MG
CHECKED BY:	SW

STEPHEN D. WILLIAMS, P.E.
FLORIDA REG. NO. 32090
(FOR THE FIRM)

SHEET TITLE

WATER AND SEWER DETAILS

SHEET NUMBER

CU-501

SHEET 18 of 26

PROJECT NO. 09675.00

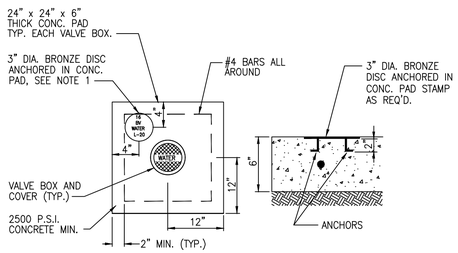

UNIMPROVED CONDITION

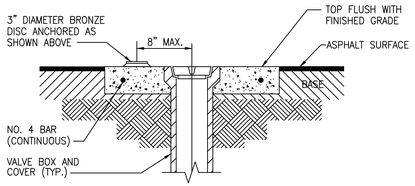

ALTERNATIVE FOR IMPROVED CONDTITION

NOTES:

1. BRONZE DISC TO BE SUPPLIED BY CITY.
2. AMERICAN FLOW CONTROL TRENCH ADAPTER VALVE BOX AND EXTENSION IS PREFERRED.

Date	Revisions	Appr. by	Date: Nov. 1999	Scale: N.T.S.	Dwg: F111	Fig: 111

CITY OF COCONUT CREEK
UTILITIES AND ENGINEERING DEPARTMENT

VALVE COLLAR DETAIL

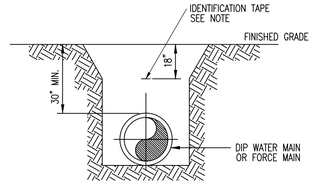

SECTION

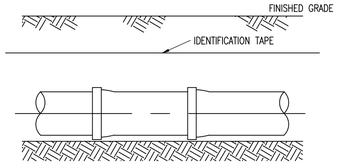

PROFILE

NOTE:

DETECTABLE IDENTIFICATION TAPE SHALL BE INSTALLED DIRECTLY OVER CENTERLINE OF THE PIPE AT 18-INCHES BELOW FINISHED GRADE.

Date	Revisions	Appr. by	Date: Nov. 1999	Scale: N.T.S.	Dwg: F112	Fig: 112

CITY OF COCONUT CREEK
UTILITIES DEPARTMENT

LOCATING TAPE DETAIL

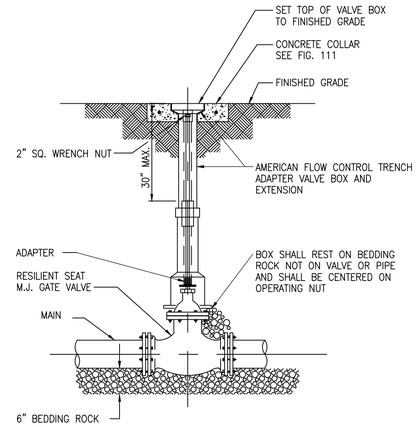

NOTES:

WHEN VALVE IS NOT LOCATED IN PAVEMENT, PLACE A WHITE PAVEMENT REFLECTOR MARKER IN THE DRIVE LANE, ADJACENT TO THE VALVE.

Date	Revisions	Appr. by	Date: Nov. 1999	Scale: N.T.S.	Dwg: F115	Fig: 115

CITY OF COCONUT CREEK
UTILITIES AND ENGINEERING DEPARTMENT

GATE VALVE AND BOX DETAIL

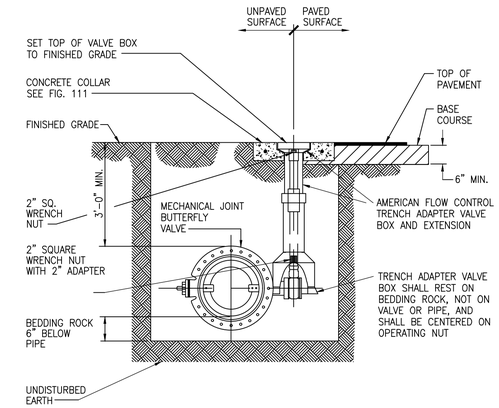

NOTES:

WHEN WATER VALVE IS NOT LOCATED IN PAVEMENT, PLACE A WHITE PAVEMENT REFLECTOR MARKER IN THE DRIVE LANE, ADJACENT TO THE VALVE.

Date	Revisions	Appr. by	Date: Nov 1999	Scale: N.T.S.	Dwg: F116	Fig: 116

CITY OF COCONUT CREEK
UTILITIES AND ENGINEERING DEPARTMENT

BUTTERFLY VALVE AND BOX DETAIL

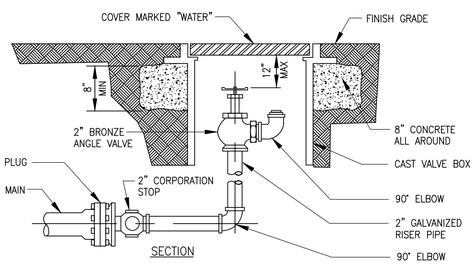

SECTION

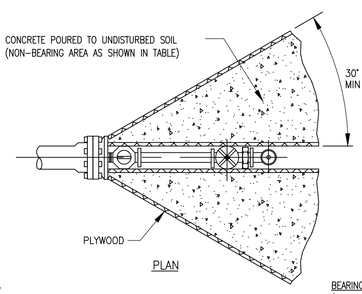

PLAN

BEARING AREAS FOR BLOW OFF THRUST BLOCKS	
PLUG SIZE (INCHES)	BEARING AREA IN SQ. FT.
4	1.0
6	2.1
8	3.8
10	5.9
12	8.5
14	11.5
16	15.0
18	19.0
20	23.5
24	34.0

NOTES:

1. PIPE JOINT COMPOUND SHALL BE APPLIED TO MALE THREADS ONLY.
2. COAT ALL EXPOSED THREADS WITH BITUMASTIC BEFORE BACKFILLING.
3. 2" TOP IN BOTTOM OF PLUG.
4. PLYWOOD AND CONCRETE TO HAVE A HEIGHT EQUAL TO THE DIAMETER OF THE PIPE.

BEARING AREA = (TEST PRESSURE/150) x (2000/SOIL BEARING STRESS) x (TABLE VALUE)

Date	Revisions	Appr. by	Date: Nov. 1999	Scale: N.T.S.	Dwg: F117	Fig: 117

CITY OF COCONUT CREEK
UTILITIES AND ENGINEERING DEPARTMENT

BLOW OFF VALVE DETAIL

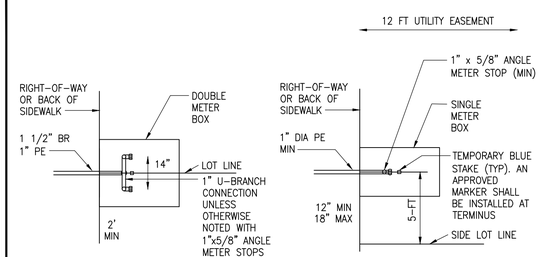

DOUBLE SERVICE PLAN

SINGLE SERVICE PLAN

NOTE:

WATER METER TO BE INSTALLED BY THE CITY. METER BOX TO BE SUPPLIED BY THE CITY AND INSTALLED BY THE BUILDER. BACKFLOW PREVENTOR SHALL BE INSTALLED DOWNSTREAM OF METER PER CODE. 18" MIN SEPARATION SHALL BE MAINTAINED BETWEEN SERVICE SADDLES

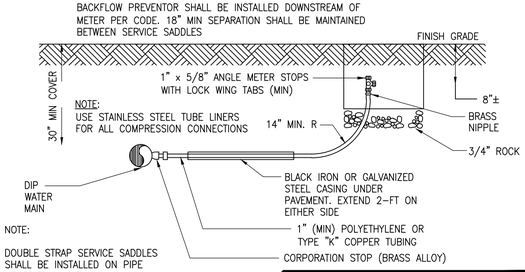

NOTE:

USE STAINLESS STEEL TUBE LINERS FOR ALL COMPRESSION CONNECTIONS

NOTE:

DOUBLE STRAP SERVICE SADDLES SHALL BE INSTALLED ON PIPE OTHER THAN DIP

Date	Revisions	Appr. by	Date: Nov. 1999	Scale: N.T.S.	Dwg: F119	Fig: 119

CITY OF COCONUT CREEK
UTILITIES AND ENGINEERING DEPARTMENT

WATER SERVICE CONNECTION DETAILS

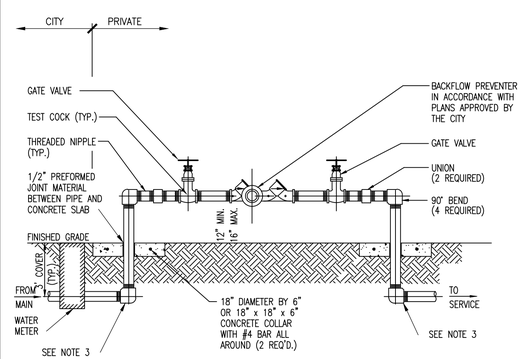

NOTES:

1. ALL PIPE AND FITTINGS 2" AND SMALLER SHALL BE THREADED BRASS, AS SHOWN. ALL 3" PIPE TO BE GALVANIZED STEEL.
2. ALL PIPE FITTINGS LARGER THAN 4" SHALL BE CEMENT-LINED DUCTILE IRON WITH FLANGED FITTINGS FOR ABOVEGROUND USE. MECHANICAL JOINT FITTINGS SHALL BE USED UNDERGROUND WITH RESTRAINED JOINTS AND THRUST COLLARS.
3. MEGALUGS, OR EQUAL, CAN BE USED IN PLACE OF RESTRAINED JOINTS ON ALL UNDERGROUND DUCTILE IRON PIPING (4" AND LARGER).
4. PAINT ALL ABOVEGROUND DUCTILE PIPING, FITTINGS AND VALVES.

Date	Revisions	Appr. by	Date: Nov. 1999	Scale: N.T.S.	Dwg: F120	Fig: 120

CITY OF COCONUT CREEK
UTILITIES AND ENGINEERING DEPARTMENT

REDUCED PRESSURE BACKFLOW PREVENTER

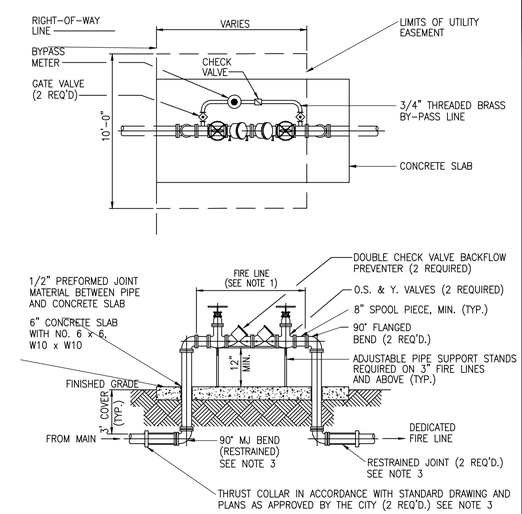

NOTES:

1. ALL PIPE AND FITTINGS 2" AND SMALLER SHALL BE THREADED BRASS.
2. ALL PIPE FITTINGS 4" DIA. AND LARGER SHALL BE CEMENT-LINED DUCTILE IRON WITH FLANGED FITTINGS FOR ABOVEGROUND USE. MECHANICAL JOINT FITTINGS SHALL BE USED UNDERGROUND.
3. MEGALUGS, OR EQUAL, CAN BE USED IN PLACE OF RESTRAINED JOINTS ON ALL UNDERGROUND PIPING.
4. PAINT ALL ABOVEGROUND DUCTILE PIPING, FITTINGS AND VALVES.

Date	Revisions	Appr. by	Date: Nov. 1999	Scale: N.T.S.	Dwg: F121	Fig: 121

CITY OF COCONUT CREEK
UTILITIES AND ENGINEERING DEPARTMENT

FIRELINE DOUBLE DETECTOR CHECK VALVE ASSEMBLY

KEITH & ASSOCIATES, INC.
consulting engineers
301 East Atlantic Boulevard
Pompano Beach, Florida 33060-6643
2160 NW 82nd Avenue
Doral, Florida 33122
P: (954) 788-3400 F: (954) 788-3500
Florida Certificate of Authorization # - 7928

BID / CONTRACT NO. :

REVISIONS

NO.	DESCRIPTION	DATE
1	PER DRC COMMENTS	6/8/2017
2	PER DRC COMMENTS	8/24/17

LEDER HILLSBORO STORAGE

SCALE:	AS NOTED
DATE ISSUED:	JANUARY 31, 2018
DRAWN BY:	MG
DESIGNED BY:	MG
CHECKED BY:	SW

STEPHEN D. WILLIAMS, P.E.
FLORIDA REG. NO. 32090
(FOR THE FIRM)

SHEET TITLE

WATER AND SEWER DETAILS

SHEET NUMBER

CU-502

SHEET 19 of 26

PROJECT NO. 09675.00

Drawing name: N:\09\09675.00 - Pini Lodge - Leder Group\Engineering\Cad\09675.00-CU-5XX.dwg Layout Name: CU-502 Plotted by: MGrimbank Plotted on: Apr 26, 2018 - 2:18pm

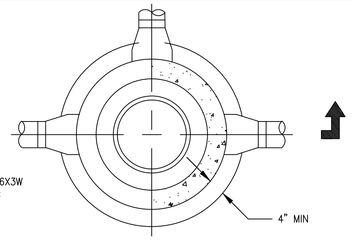

CITY OF COCONUT CREEK
UTILITIES AND ENGINEERING DEPARTMENT

CONCENTRIC PRECAST MANHOLE DETAIL
(6'-0" AND UNDER)

Date	Revisions	Appr. by	Date: Nov. 1999	Scale: N.T.S.	Dwg: F200	Fig: 200

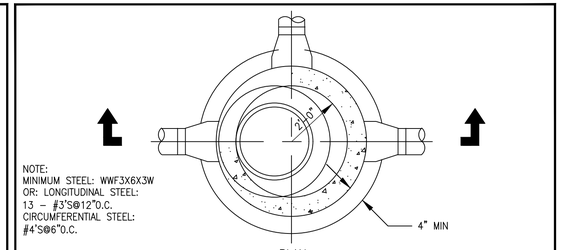

CITY OF COCONUT CREEK
UTILITIES AND ENGINEERING DEPARTMENT

ECCENTRIC PRECAST MANHOLE DETAIL
(6'-0" DEPTH AND GREATER)

Date	Revisions	Appr. by	Date: Nov. 1999	Scale: N.T.S.	Dwg: F200A	Fig: 200A

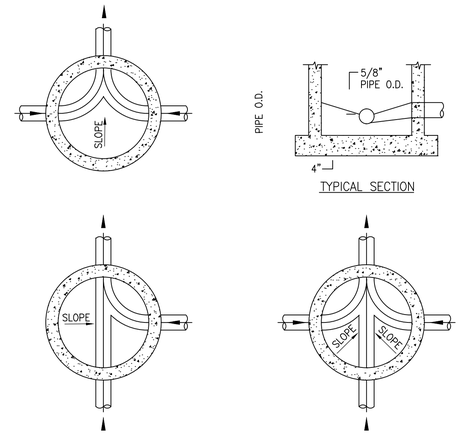

NOTES:

1. INVERT CHANNELS TO BE CONSTRUCTED FOR SMOOTH FLOW WITH NO OBSTRUCTIONS.
2. SPILLWAYS SHALL BE CONSTRUCTED BETWEEN PIPES WITH DIFFERENT INVERT ELEVATIONS PROVIDING FOR SMOOTH FLOWS.
3. CHANNELS TO BE FORMED IN ALL MANHOLES TO ACCEPT T.V. CAMERA.
4. WHEN DIRECTIONAL CHANNELS EXCEEDING 45-DEGREES OCCUR, AN EXTRA FLOW LINE ELEVATION DROP OF 0.05-FT ACROSS THE MANHOLE SHALL BE PROVIDED.

CITY OF COCONUT CREEK
UTILITIES AND ENGINEERING DEPARTMENT

MANHOLE FLOW CHANNEL DETAIL

Date	Revisions	Appr. by	Date: Dec. 1999	Scale: N.T.S.	Dwg: F200B	Fig: 200B

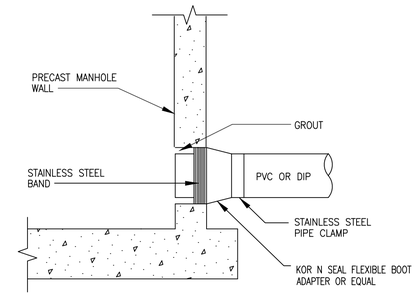

STANDARD PRECAST MANHOLE PIPE CONNECTION

NOTES:

1. THE CITY MAY APPROVE ALTERNATE WATER TIGHT CONNECTION DETAILS FOR CONNECTION OF 24" DIAMETER PIPES AND LARGER.
2. AN OUTSIDE DROP CONNECTION SHALL BE REQUIRED FOR ALL INFLUENT PIPES WHICH HAVE AN INVERT 2' OR MORE ABOVE THE MANHOLE BOTTOM.

CITY OF COCONUT CREEK
UTILITIES AND ENGINEERING DEPARTMENT

MANHOLE CONNECTION DETAIL
(WITH BUILT-IN RUBBER BOOT)

Date	Revisions	Appr. by	Date: Nov. 1999	Scale: N.T.S.	Dwg: F201	Fig: 201

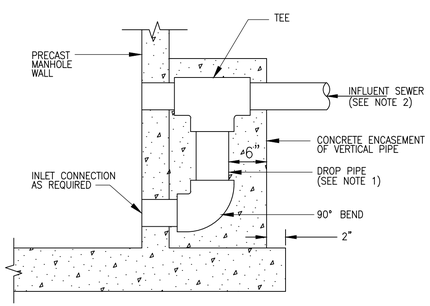

STANDARD DROP DETAIL

NOTES:

1. DROP PIPE AND FITTINGS SHALL BE OF EQUAL SIZE AND MATERIAL AS THE INFLUENT SEWER.
2. AN OUTSIDE DROP CONNECTION SHALL BE REQUIRED FOR ALL INFLUENT WHICH HAVE AN INVERT 2' OR MORE ABOVE THE MANHOLE INVERT.

CITY OF COCONUT CREEK
UTILITIES AND ENGINEERING DEPARTMENT

DROP MANHOLE DETAIL

Date	Revisions	Appr. by	Date: Dec. 1999	Scale: N.T.S.	Dwg: F202	Fig: 202

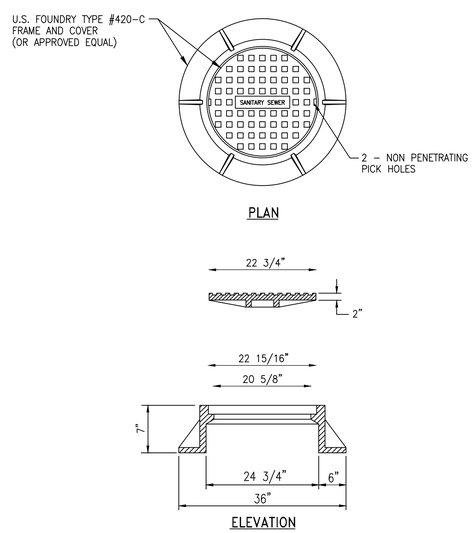

CITY OF COCONUT CREEK
UTILITIES AND ENGINEERING DEPARTMENT

SANITARY MANHOLE COVER

Date	Revisions	Appr. by	Date: Nov. 1999	Scale: N.T.S.	Dwg: F203	Fig: 203

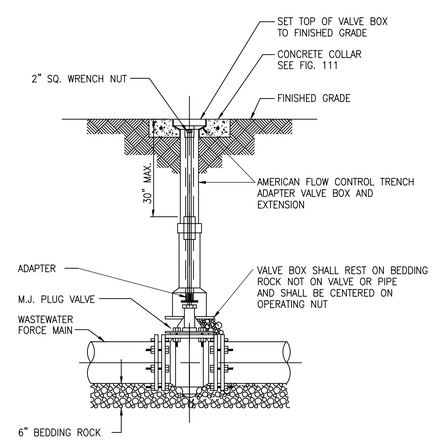

NOTE:

WHEN PLUG VALVE IS NOT LOCATED IN PAVEMENT, PLACE A GREEN PAVEMENT REFLECTOR MARKER IN THE DRIVE LANE, ADJACENT TO THE VALVE.

CITY OF COCONUT CREEK
UTILITIES AND ENGINEERING DEPARTMENT

PLUG VALVE AND BOX DETAIL

Date	Revisions	Appr. by	Date: Nov. 1999	Scale: N.T.S.	Dwg: F204	Fig: 204

KEITH & ASSOCIATES, INC.
consulting engineers
301 East Atlantic Boulevard
Pompano Beach, Florida 33060-6643
2160 NW 82nd Avenue
Doral, Florida 33122
P: (954) 788-3400 F: (954) 788-3500
Florida Certificate of Authorization # - 7928

BID / CONTRACT NO. :

REVISIONS

NO.	DESCRIPTION	DATE
1	PER DRC COMMENTS	6/8/2017
2	PER DRC COMMENTS	8/24/17

LEDER HILLSBORO STORAGE

SCALE:	AS NOTED
DATE ISSUED:	JANUARY 31, 2018
DRAWN BY:	MG
DESIGNED BY:	MG
CHECKED BY:	SW

STEPHEN D. WILLIAMS, P.E.
FLORIDA REG. NO. 32090
(FOR THE FIRM)

SHEET TITLE

WATER AND SEWER DETAILS

SHEET NUMBER

CU-503

SHEET 20 of 26

PROJECT NO. 09675.00

Drawing name: N:\09\09675.00 - Pht Ludge - Leder Group\Engineering\Cad\09675.00-CU-SXX.dwg Layout Name: CU-503 Plotted by: MGrimbank Plotted on: Apr 26, 2018 - 2:18pm

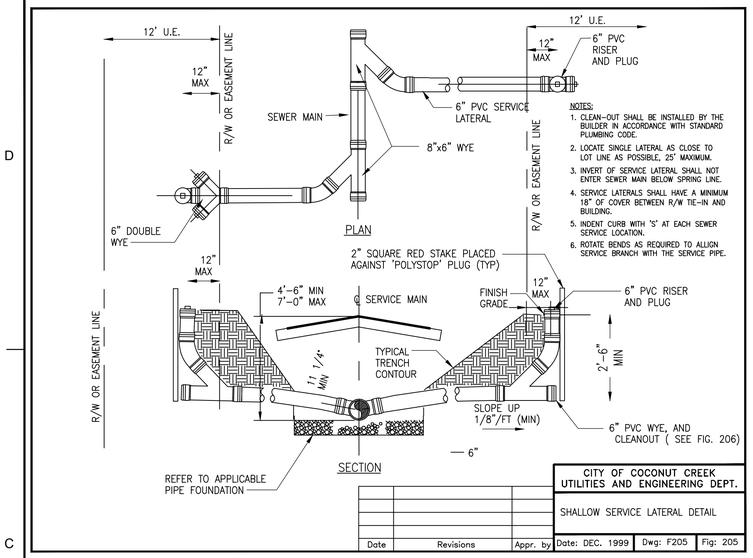

NOTES:

1. CLEAN-OUT SHALL BE INSTALLED BY THE BUILDER IN ACCORDANCE WITH STANDARD PLUMBING CODE.
2. LOCATE SINGLE LATERAL AS CLOSE TO LOT LINE AS POSSIBLE, 25' MAXIMUM.
3. INVERT OF SERVICE LATERAL SHALL NOT ENTER SEWER MAIN BELOW SPRING LINE.
4. SERVICE LATERALS SHALL HAVE A MINIMUM 18" OF COVER BETWEEN R/W TIE-IN AND BUILDING.
5. INDENT CURB WITH 'S' AT EACH SEWER SERVICE LOCATION.
6. ROTATE BENDS AS REQUIRED TO ALLIGN SERVICE BRANCH WITH THE SERVICE PIPE.

CITY OF COCONUT CREEK
UTILITIES AND ENGINEERING DEPT.

SHALLOW SERVICE LATERAL DETAIL

Date	Revisions	Appr. by	Date: DEC. 1999	Dwg: F205	Fig: 205

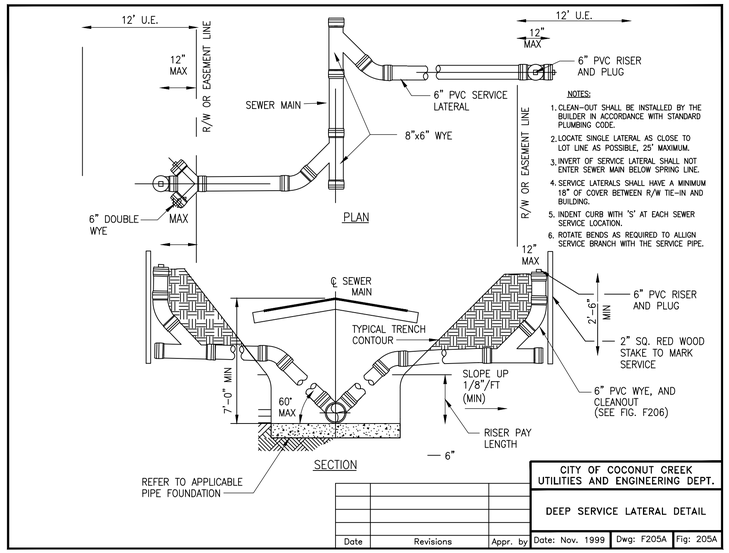

NOTES:

1. CLEAN-OUT SHALL BE INSTALLED BY THE BUILDER IN ACCORDANCE WITH STANDARD PLUMBING CODE.
2. LOCATE SINGLE LATERAL AS CLOSE TO LOT LINE AS POSSIBLE, 25' MAXIMUM.
3. INVERT OF SERVICE LATERAL SHALL NOT ENTER SEWER MAIN BELOW SPRING LINE.
4. SERVICE LATERALS SHALL HAVE A MINIMUM 18" OF COVER BETWEEN R/W TIE-IN AND BUILDING.
5. INDENT CURB WITH 'S' AT EACH SEWER SERVICE LOCATION.
6. ROTATE BENDS AS REQUIRED TO ALLIGN SERVICE BRANCH WITH THE SERVICE PIPE.

CITY OF COCONUT CREEK
UTILITIES AND ENGINEERING DEPT.

DEEP SERVICE LATERAL DETAIL

Date	Revisions	Appr. by	Date: Nov. 1999	Dwg: F205A	Fig: 205A

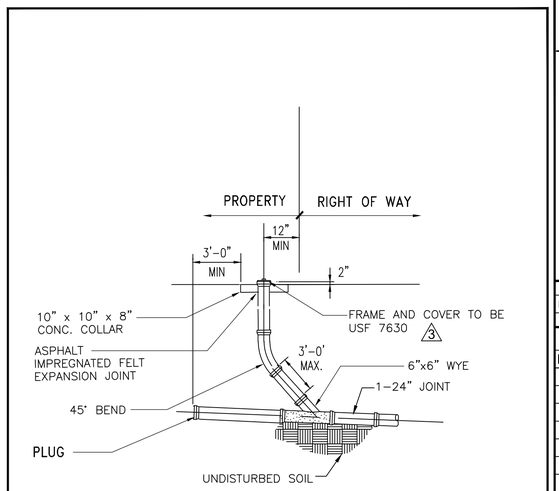

CITY OF COCONUT CREEK
UTILITIES AND ENGINEERING DEPARTMENT

SANITARY SERVICE CLEANOUT DETAIL

Date	Revisions	Appr. by	Date: Dec. 1999	Scale: N.T.S.	Dwg: F206	Fig: 206

KEITH & ASSOCIATES, INC.
consulting engineers
301 East Atlantic Boulevard
Pompano Beach, Florida 33060-6643
2160 NW 82nd Avenue
Doral, Florida 33122
P: (954) 788-3400 F: (954) 788-3500
Florida Certificate of Authorization # - 7928

BID / CONTRACT NO. :

REVISIONS

NO.	DESCRIPTION	DATE
1	PER DRC COMMENTS	6/8/2017
2	PER DRC COMMENTS	8/24/17
3	PER CITY COMMENTS	12/28/2017

LEDER HILLSBORO STORAGE

SCALE:	AS NOTED
DATE ISSUED:	JANUARY 31, 2018
DRAWN BY:	MG
DESIGNED BY:	MG
CHECKED BY:	SW

STEPHEN D. WILLIAMS, P.E.
FLORIDA REG. NO. 32090
(FOR THE FIRM)

SHEET TITLE

WATER AND SEWER DETAILS

SHEET NUMBER

CU-504

SHEET 21 of 26

PROJECT NO. 09675.00

Drawing name: N:\09\09675.00 - Pet Ledge - Leder Group\Engineering\Cadd\09675.00-CU-5XX.dwg Layout Name: CU-504 Plotted by: MGrinbank Plotted on: Apr 26, 2018 - 2:18pm

BROWARD COUNTY HIGHWAY CONSTRUCTION AND ENGINEERING DIVISION

☐ PLAT CONSISTENT WITH PLAT REQUIREMENTS PUBLIC R/W
☐ PUBLIC RIGHT OF WAY APPROVAL FOR PAVING, GRADING AND DRAINAGE

BY:_____ DATE:_____

DOES NOT INCLUDE APPROVAL OF PAVEMENT MARKINGS & SIGNS

NOTES:

1. ALL SIGNS SHALL USE TYPE XI SHEETING.

2. ANY PAVEMENT MARKINGS OR SIGNS DAMAGED DURING CONSTRUCTION SHALL BE RESTORED ACCORDING TO BROWARD COUNTY TRAFFIC ENGINEERING STANDARDS.

R1-1 STOP SIGN (30" x 30")

R5-1 DO NOT ENTER SIGN (30" x 30")

FTP-55R-06 RIGHT TURN ONLY SIGN (24" x 30")

FIRE LANE SIGN (12" x 18")

R6-1R ONE WAY SIGN (54" x 18")

MATCH LINE-SEE SHEET CM-102

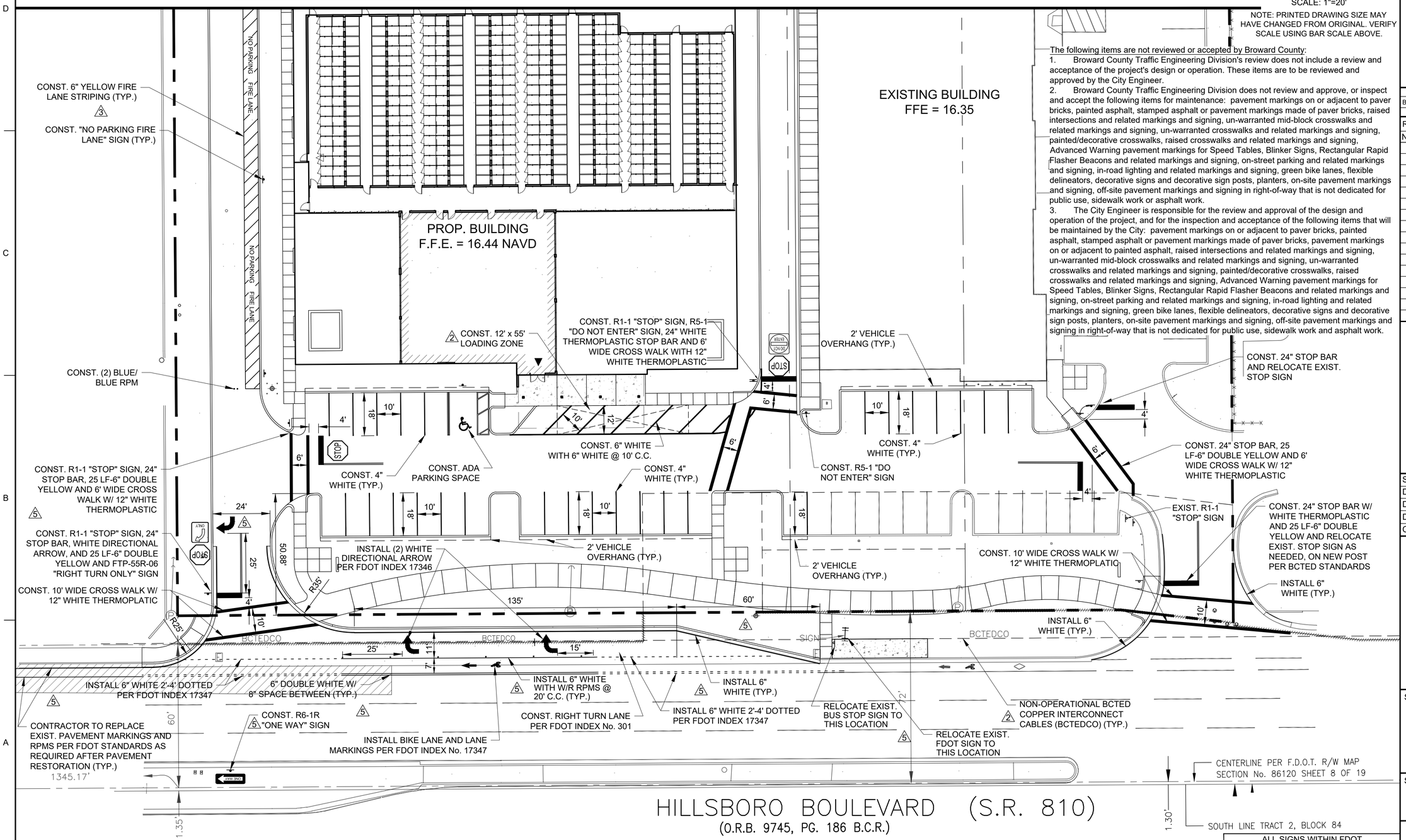

N

GRAPHIC SCALE

0 20 40

SCALE: 1"=20'

NOTE: PRINTED DRAWING SIZE MAY HAVE CHANGED FROM ORIGINAL. VERIFY SCALE USING BAR SCALE ABOVE.

The following items are not reviewed or accepted by Broward County:

1. Broward County Traffic Engineering Division's review does not include a review and acceptance of the project's design or operation. These items are to be reviewed and approved by the City Engineer.

2. Broward County Traffic Engineering Division does not review and approve, or inspect and accept the following items for maintenance: pavement markings on or adjacent to paver bricks, painted asphalt, stamped asphalt or pavement markings made of paver bricks, raised intersections and related markings and signing, un-warranted mid-block crosswalks and related markings and signing, un-warranted crosswalks and related markings and signing, painted/decorative crosswalks, raised crosswalks and related markings and signing, Advanced Warning pavement markings for Speed Tables, Blinker Signs, Rectangular Rapid Flasher Beacons and related markings and signing, on-street parking and related markings and signing, in-road lighting and related markings and signing, green bike lanes, flexible delineators, decorative signs and decorative sign posts, planters, on-site pavement markings and signing, off-site pavement markings and signing in right-of-way that is not dedicated for public use, sidewalk work or asphalt work.

3. The City Engineer is responsible for the review and approval of the design and operation of the project, and for the inspection and acceptance of the following items that will be maintained by the City: pavement markings on or adjacent to paver bricks, painted asphalt, stamped asphalt or pavement markings made of paver bricks, pavement markings on or adjacent to painted asphalt, raised intersections and related markings and signing, un-warranted mid-block crosswalks and related markings and signing, un-warranted crosswalks and related markings and signing, painted/decorative crosswalks, raised crosswalks and related markings and signing, Advanced Warning pavement markings for Speed Tables, Blinker Signs, Rectangular Rapid Flasher Beacons and related markings and signing, on-street parking and related markings and signing, in-road lighting and related markings and signing, green bike lanes, flexible delineators, decorative signs and decorative sign posts, planters, on-site pavement markings and signing, off-site pavement markings and signing in right-of-way that is not dedicated for public use, sidewalk work and asphalt work.

ALL SIGNS WITHIN FDOT RIGHT-OF-WAY SHALL BE IN ACCORDANCE WITH FDOT INDEX 11860

KEITH
Corporate Office
301 East Atlantic Boulevard
Pompano Beach, Florida 33060-6643
(954) 788-3400

Miami-Dade County
2160 NW 82 Avenue
Doral, Forida 33122

Palm Beach County
120 N Federal Highway, Suite 208
Lake Worth, Florida 33460

Orange County
2948 E Livingston Street
Orlando, Florida 32803

State of Florida Certificate of Authorization Number - 7928

BID / CONTRACT NO. :

REVISIONS

NO.	DESCRIPTION	DATE
1	PER DRC COMMENTS	6/8/2017
2	PER DRC COMMENTS	8/24/17
3	PER CITY COMMENTS	12/28/2017
4	PER BCTED COMMENTS	6/11/18
5	PER BCHCED COMMENTS	6/15/18

LEDER HILLSBORO STORAGE

SCALE:	AS NOTED
DATE ISSUED:	JANUARY 31, 2018
DRAWN BY:	MG
DESIGNED BY:	MG
CHECKED BY:	SW

STEPHEN D. WILLIAMS, P.E.
FLORIDA REG. NO. 32090
(FOR THE FIRM)

SHEET TITLE

PAVEMENT MARKING AND SIGNAGE PLAN

SHEET NUMBER

CM-101

SHEET 22 of 27

PROJECT NO. 09675.00

Drawing name: N:\09\09675.00 - Pet Lodge - Leder Group\Engineering\Cad\09675.00-CM-101X.dwg Layout Name: CM-101 Plotted on: Jun 18, 2018 - 11:42am Plotted by: MGrotsack

BCHCED REF. # 180514051

N.W. 71ST STREET
(P.B. 2, PG. 53, P.B.C.R.)

NOTES:

1. ALL SIGNS SHALL USE TYPE XI SHEETING.
2. ANY PAVEMENT MARKINGS OR SIGNS DAMAGED DURING CONSTRUCTION SHALL BE RESTORED ACCORDING TO BROWARD COUNTY TRAFFIC ENGINEERING STANDARDS.

N

GRAPHIC SCALE
0 20 40

SCALE: 1"=20'

NOTE: PRINTED DRAWING SIZE MAY HAVE CHANGED FROM ORIGINAL. VERIFY SCALE USING BAR SCALE ABOVE.

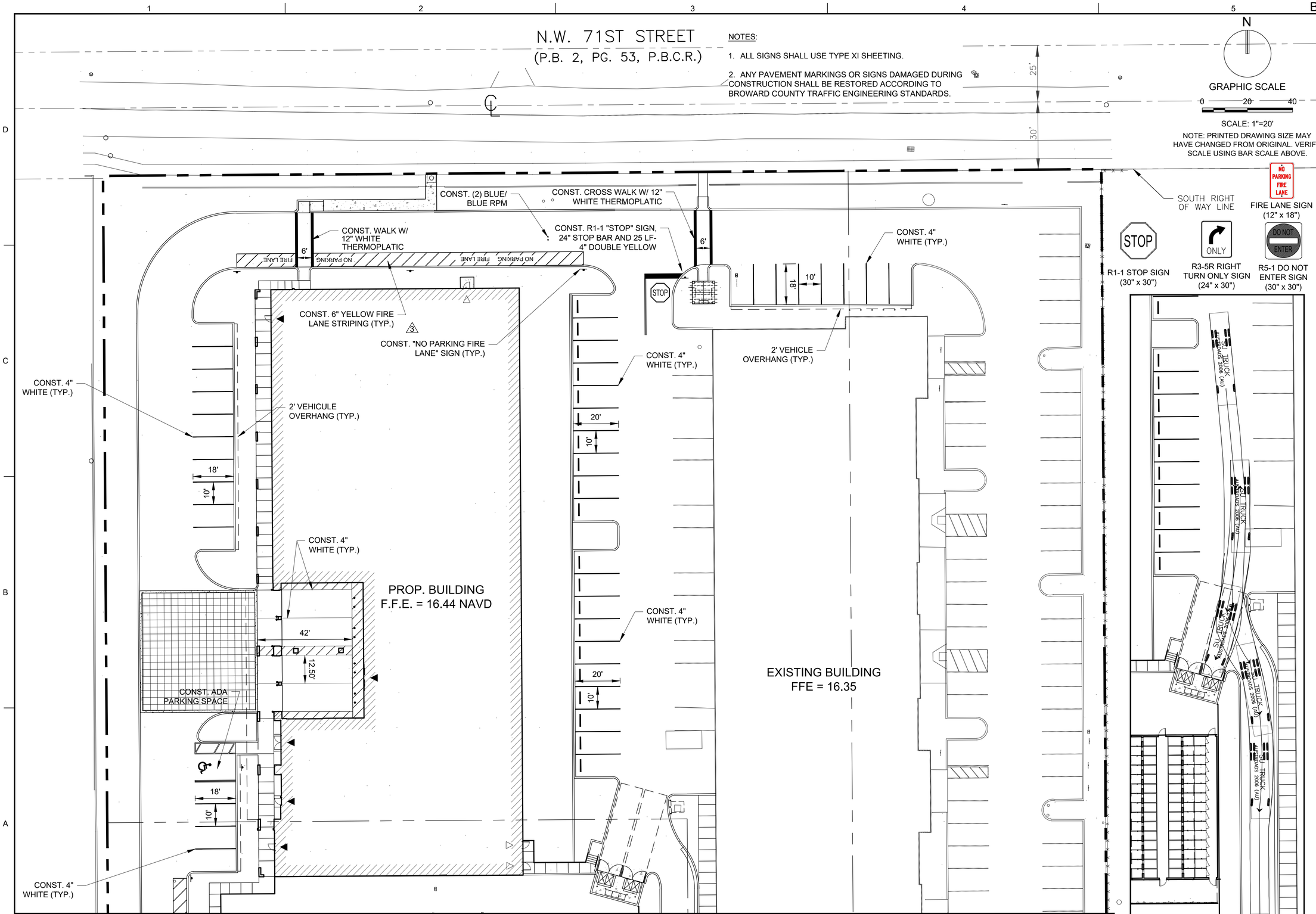

MATCH LINE-SEE SHEET CM-101

2 REFUSE TRUCK ACCESS EXHIBIT

KEITH
Corporate Office
301 East Atlantic Boulevard
Pompano Beach, Florida 33060-6643
(954) 788-3400

Miami-Dade County
2160 NW 82 Avenue
Doral, Forida 33122

Palm Beach County
120 N Federal Highway, Suite 208
Lake Worth, Florida 33460

Orange County
2948 E Livingston Street
Orlando, Florida 32803

State of Florida Certificate of Authorization Number - 7928

BID / CONTRACT NO. :

REVISIONS

NO.	DESCRIPTION	DATE
1	PER DRC COMMENTS	6/8/2017
2	PER DRC COMMENTS	8/24/17
3	PER CITY COMMENTS	12/28/2017

LEDER HILLSBORO STORAGE

SCALE:	AS NOTED
DATE ISSUED:	JANUARY 31, 2018
DRAWN BY:	MG
DESIGNED BY:	MG
CHECKED BY:	SW

STEPHEN D. WILLIAMS, P.E.
FLORIDA REG. NO. 32090
(FOR THE FIRM)

SHEET TITLE

PAVEMENT MARKING AND SIGNAGE PLAN

SHEET NUMBER

CM-102

SHEET 23 of 27

PROJECT NO. 09675.00

Drawing name: N:\09\09675.00 - Pet Lodge - Leder Group\Engineering\Cad\09675.00-CM-1XX.dwg Layout Name: CM-102 Plotted by: MGrimbark Plotted on: Jun 15, 2018 - 5:26pm

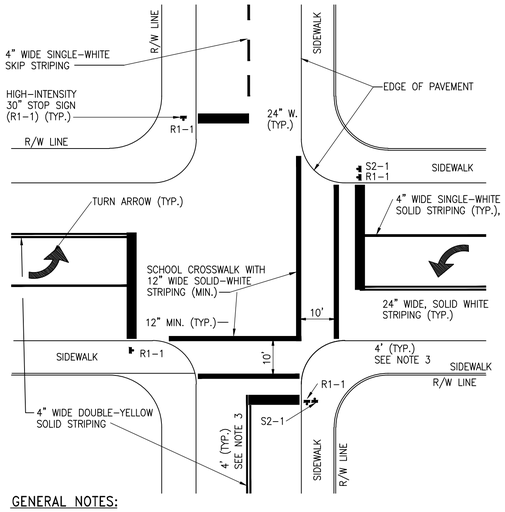

GENERAL NOTES:

1. ALL PAVEMENT MARKINGS AND SIGNING SHALL BE IN ACCORDANCE WITH THE "MANUAL ON UNIFORM TRAFFIC CONTROL DEVICES FOR STREET AND HIGHWAYS," UNLESS SPECIFIED OTHERWISE.
2. SEE FIGURE 307 FOR ADDITIONAL SIGNAGE, MARKING AND CROSSWALK DETAILS.
3. 4-FEET DISTANCE ACROSS TWO-LANE RESIDENTIAL STREETS; 40-FEET DISTANCE FOR FOUR TO SIX-LANE HIGHWAY.
4. DOUBLE-SIGNING SHALL BE INSTALLED BY WORK ORDER REQUEST.

SOURCE: BROWARD COUNTY PUBLIC WORKS ENGINEERING DIVISION MINIMUM STANDARDS, APRIL 1995

Date	Revisions	Appr. by

CITY OF COCONUT CREEK
UTILITIES AND ENGINEERING DEPARTMENT

PAVEMENT SIGNING AND MARKING DETAILS

Date: Dec. 1999 | Scale: N.T.S. | Dwg: F306 | Fig: 306

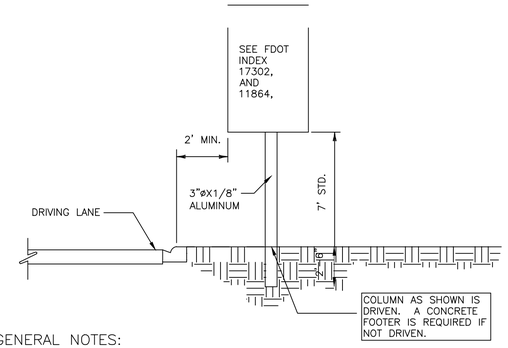

GENERAL NOTES:

1. The typical section shown here serves as a guide for locating the traffic signs required under various roadside conditions. For size and details of sign construction and footing, refer to the appropriate FDOTstandard index drawing for roadside sign.
2. It shall be the CONTRACTORS respon - sibility to verify the length of sign supports in the field prior to fabrication.
3. Roadside signs shall be installed at an angle of 1 to 4 degrees away from the traffic flow(see illustration). Shoulder mounted signs shall be rotated counterclockwise and median mounted signs rotated clockwise. Signs on curves shall be mounted as noted above from the perpendicular to the motorists line of sight.

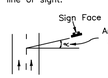

4. The setback for stop and yield signs may be reduced to 3' minimum from the driving lane if required for visibility in business or residential sections with no curb and speeds of 30 MPH or less.
5. The mounting heights are measured from the bottom of the sign panel to a horizontal line extended from the edge of the driving lane. If the standard heights cannot be met, the minimum heights are as follows:

Expressway & Freeway Systems	7'
Other Roadway Systems Rural	5'
Urban (including residential with parking and/or pedestrian activity)	7'

If a secondary sign is mounted below the major sign,the major sign shall be at least 8' and the secondary sign at least 5' for expressway & freeway systems and for other systems the height to the secondary sign shall be at least 4' for rural and 6' for urban sections.

6. Sign supports should never be placed in ditches where erosion might affect the proper operation of the breakaway feature. It is also possible that a vehicle entering the ditch might be guided into the support.

Date	Revisions	Appr. by

CITY OF COCONUT CREEK
UTILITIES AND ENGINEERING DEPARTMENT

TYPICAL ROADSIDE SIGN PLACEMENT DETAIL

Date: Feb. 2000 | Scale: N.T.S. | Dwg: F313A | Fig: 313A

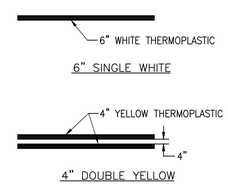

STRIPING DETAIL

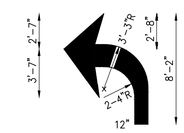

DIMENSIONS ARE ±1".
16 s.f.

TURN ARROW

SIDEWALK
SEE FIGURE 304

SOURCE: BROWARD COUNTY PUBLIC WORKS ENGINEERING DIVISION MINIMUM STANDARDS, APRIL 1995

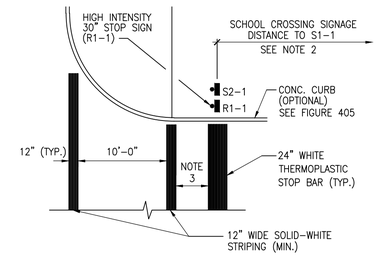

STOP SIGN, STOP BAR, AND SCHOOL CROSSING DETAIL

GENERAL NOTES:

1. ALL PAVEMENT MARKINGS AND SIGNING SHALL BE IN ACCORDANCE WITH THE "MANUAL ON UNIFORM CONTROL DEVICES FOR STREET AND HIGHWAYS," UNLESS SPECIFIED OTHERWISE.
2. SCHOOL CROSSING SIGNAGE S1-1 TO BE PLACED AT THE FOLLOWING DISTANCE FROM S2-1, ON APROACH TO THE CROSSWALK: 25-35 MPH = 200'; 35-45 MPH = 350'; 45-55 MPH = 500'.
3. 4-FEET DISTANCE ACROSS TWO-LANE RESIDENTIAL STREETS; 40-FEET DISTANCE FOR FOUR TO SIX-LANE HIGHWAYS.

Date	Revisions	Appr. by

FIGURE 307

CITY OF COCONUT CREEK
UTILITIES AND ENGINEERING DEPARTMENT

Date: Dec. 1999 | Scale: N.T.S. | Dwg: F307

PAVEMENT MARKING DETAILS

ALL ON-SITE SIGNS SHALL BE IN ACCORDANCE WITH BROWARD COUNTY "STOP SIGN AND STREET IDENTIFICATION ASSEMBLY TYPICAL DETAILS".

ALL SIGNS WITHIN FDOT RIGHT-OF-WAY SHALL BE IN ACCORDANCE WITH FDOT INDEX 11860

KEITH
Corporate Office
301 East Atlantic Boulevard
Pompano Beach, Florida 33060-6643
(954) 788-3400

Miami-Dade County
2160 NW 82 Avenue
Doral, Forida 33122

Palm Beach County
120 N Federal Highway, Suite 208
Lake Worth, Florida 33460

Orange County
2948 E Livingston Street
Orlando, Florida 32803

State of Florida Certificate of Authorization Number - 7928

BID / CONTRACT NO. :

REVISIONS

NO.	DESCRIPTION	DATE
1	PER DRC COMMENTS	6/8/2017
2	PER DRC COMMENTS	8/24/17
3	PER BCTED COMMENTS	6/11/18

LEDER HILLSBORO STORAGE

SCALE:	AS NOTED
DATE ISSUED:	JANUARY 31, 2018
DRAWN BY:	MG
DESIGNED BY:	MG
CHECKED BY:	SW

STEPHEN D. WILLIAMS, P.E.
FLORIDA REG. NO. 32090
(FOR THE FIRM)

SHEET TITLE
CITY OF COCONUT CREEK PAVEMENT MARKING AND SIGNAGE DETAILS 3

SHEET NUMBER
CM-501

SHEET 24 of 27

PROJECT NO. 09675.00

Drawing name: N:\09\09675.00 - Pin Ludge - Leder Group\Engineering\Cadd\09675.00-CM-SKX.dwg Layout Name: CM-501 Plotted by: MGzinbank Plotted on: Jun 15, 2018 - 5:27pm

Broward County Traffic Engineering Division Communications Notes

To be placed within plan set

(Revised: 10/13/2015)

"Communications Notes"

The agency responsible for maintenance of the traffic signals and related equipment is Broward County Traffic Engineering Division (BCTED). All system communications equipment, cabling and related material shall comply with Broward County's latest edition of the minimum standards as expressed in the "Standards and Specifications - Communication Infrastructure" document. Please refer to (BCTED's) Communications Policies and Procedures for additional information. Broward County Traffic Engineering Division will not accept any projects that do not meet these standards and specifications. If fiber optic pull boxes already exist at an intersection, no additional fiber optic pull boxes will need to be installed. For a copy of these standards refer to the Broward County web site at www.BROWARD.ORG/TRAFFIC under publications.

If there are Copper Interconnect Cable/s within your project limits or within 1500 feet of your project limits, contact the Communications Manager at tecommunications@broward.org or 954-847-2745.

If there are Fiber Optic Cable/s within your project limits or within 1500 feet of your project limits contact the Communications Manager at tecommunications@broward.org or 954-847-2745.

If there are cellular communications within your project limits, contact the Communications Manager at tecommunications@broward.org or 954-847-2745

All BCTED communications cables/conduit shall be located a minimum of 48 hours in advance.

Broward County Traffic Engineering Division
Procedure for Notification of Communication Disruption

Copper Interconnect Cable Notification Contact Person
When communications to an intersection must be disrupted by a Contractor to perform work, the Contractor shall provide two day advance notice in writing to the Broward County Traffic Engineering Division. This notification shall be conveyed via electronic mail (email) to the Traffic Signal Technician III at tecommunications@broward.org. Notification shall include contact person, telephone number, purpose, location and duration. The disruption shall last for no more than 3 consecutive business days. Where possible, the disruption shall be during off peak hours beginning at 9:00am and ending at 3:00pm.

Fiber Optic Cable Notification Contact Person
When communications to an intersection must be disrupted by a Contractor to perform work, the Contractor shall provide two day advance notice in writing to the Broward County Traffic Engineering Division. This notification shall be conveyed via electronic mail (email) to the Communications Manager at tecommunications@broward.org. Notification shall include contact person, telephone number, purpose, location and duration. The disruption shall last for no more than 3 consecutive business days. Where possible, the disruption shall be during off peak hours beginning at 9:00am and ending at 3:00pm.

Include the following in any notice of utility ownership or within a "Utility Owners/Contact Person" table:

Interconnect Communications Cables - (Robert Blount) Broward County Traffic Engineering Division (BCTED) 954-847-2745

BROWARD COUNTY FLORIDA

Our Best Broward County Nothing Less

PUBLIC WORKS DEPARTMENT
TRAFFIC ENGINEERING DIVISION
2300 W. Commercial Boulevard • Fort Lauderdale, Florida 33309 • 954-847-2600 • FAX 954-847-2700

MAINTENANCE OF TRAFFIC - SCHOOL/PEDESTRIAN

The Maintenance of Traffic plan, provided by the Contractor, shall include provisions for pedestrian and/or school student traffic as well as vehicular traffic. The following are minimum requirements:

1. The safe walk route for all school students within the vicinity of the construction zone shall be maintained during student arrival and dismissal times. If the current walking surface cannot be maintained, then a temporary walkable surface shall be created. The safe walk route shall be separated from the construction activity during the entire length of the project encompassing the entire walk route with proper pedestrian openings at designated crossings in compliance with FDOT Design Standards Index No. 600 as well as meeting all ADA requirements.
2. All construction equipment activity around any designated crosswalk shall cease to operate during the student arrival and dismissal times. All construction equipment activity adjacent to a designated walk route shall cease operating unless satisfactorily barricaded from the walk route.
3. In the case that a designated crossing or any portion of the designated walk route cannot be maintained, the Contractor shall notify the Special Projects Coordinator at Broward County Traffic Engineering Division, (954) 847-2600, a minimum of ten (10) working days prior to closing that route in order to establish an alternate crossing/route.
4. It shall be the Contractor's responsibility to install any necessary pavement, road rock, pavement markings and signage and/or any pedestrian signalization and/or signal modification to accommodate an existing or alternate walk route throughout the entire length of the project.
5. It shall be the Contractor's responsibility to provide State Certified School Crossing Guards or Off Duty Police Officers to cross students at all locations other than those previously designated. The Contractor may use Flagmen, but **ONLY** if they are State Certified as a School Crossing Guard.
6. Thirty (30) days prior to the beginning of construction the Contractor shall notify the Special Projects Coordinator at Broward County Traffic Engineering Division, (954) 847-2600 or at broward@traffic.org to discuss all necessary safety measures.
7. It shall be the Contractor's responsibility to notify the following Broward County School Board Pupil Transportation Department personnel if construction will impact any bus routes:

• Ruth Masters	Routing	(754) 321-4400 Ext. # 2309	ruth.masters@browardschools.com
• Vincent Harrell	Student Transportation & Fleet Service	(754) 321-4472	vincent.harrell@browardschools.com
• Mary Tochtermann	Student Transportation & Fleet Service	(754) 321-4400 Ext. # 2006	mary.tochtermann@browardschools.com

Upon coordination with the aforementioned personnel, and if deemed necessary, a pre-construction meeting will be held to determine all bus routes and to make any necessary arrangements for rerouting. The Special Projects Coordinator from the Broward County Traffic Engineering Division, (954) 847-2600, will be notified and may attend the pre-construction meeting.

8. The Contractor shall be responsible for obtaining an approved Maintenance of Traffic Plan (MOT), specifying the above school/pedestrian conditions, through the Broward County Traffic Engineering Division or the Local Municipality, depending on the roadway jurisdiction. The conditions outlined in the MOT are fully effective as part of the proposed improvements. The Contractor shall be responsible for ensuring that all work associated with the project is in compliance with all the requirements of the approved MOT.
9. The Contractor shall ensure that there are **NO** speed limit signs installed within the designated reduced speed school zone at any time throughout the project.

Revised: 9/24/14

BROWARD COUNTY FLORIDA
TRAFFIC ENGINEERING DIVISION

Maintenance of Traffic (MOT) Instructions/Requirements

An approved MOT Plan from the Broward County Traffic Engineering Division (BCTED) shall be required when work is being performed within Broward County Right of Way regardless of whether a permit is required. The approved MOT Plan shall be on site prior to and during the entire operation. Ensure the Certified Worksite Traffic Supervisor is present to direct the initial setup of the traffic control plan, is available on a 24-hour basis, participates in all changes to traffic control and reviews the project on a daily basis. An MOT plan shall conform to, unless otherwise noted in the Broward County Minimum Standards, the latest editions of the Florida Department of Transportation (FDOT) Design Standards 600 Series and the Manual on Uniform Traffic Control Devices (MUTCD). An approved MOT Plan and a copy of the permit, if issued, must be on site at all times. The MOT is valid for the duration of the permit or completion of the project, whichever comes first. Once the MOT is approved by the BCTED, the permittee shall be solely responsible for the installation and maintenance of the approved work zone traffic control devices throughout the length of the project.

Application Process for an MOT Plan:

- Include an MOT Application Form.
- Include a location map for the project.
- Submit an applicable FDOT Design Standard Index from the 600 Series and/or a Typical Application figure from the MUTCD which represents the roadway characteristics and project conditions.
  For example:
  - If the project involves the closure of a sidewalk, include a sidewalk closure index.
  - If the project does not impede a lane but is within the right of way, include the appropriate index for work off the road.
  - If the project requires a lane shift, include a lane shift index.
- A sketch should accompany the submittals for a condition that is non-typical. Include taper lengths, shift lengths, shift widths, sign spacing, barricade or cone spacing, pavement markings, removal of pavement markings, nearby signal locations, etc..
- Indexes, Typical Applications or sketches shall have the roadways identified by name and show a north arrow.
- Applications shall include a current FDOT-approved certification for Worksite Traffic Supervisor. If you are submitting an MOT Plan with an FDOT Design Standards 600 Series Index or a Typical Application figure from the MUTCD, an Intermediate Level Certification Card will be required; if a sketch is submitted with the standard index, an Advanced Level Certification Card will be required. The certification card is required to contain the student's name, instructor's name, course provider, course category (Advance: BT-05-0079 or Intermediate: BT-05-0078), date course was successfully completed and date when training or refresher course is required.
- The FDOT Standard Index has notes in small print included on them. When sending these indexes, ensure the notes are legible.
- The MOT Plan must cover all phases of construction.
- If the project includes a sign-off sheet, it must be labeled with the project's name and/or location of the project.
- The following document will be required prior to the approval of the MOT plan when signal equipment is impacted:
  A filled out and signed form of ACCEPTANCE OF TRAFFIC SIGNAL MAINTENANCE AND TIMING BY CONTRACTOR DURING CONSTRUCTION AND BURN-IN PERIOD. The form can be downloaded under the category of Maintenance of Traffic in the webpage of http://www.broward.org/Traffic/About/Pages/Publications.aspx.
- The approval of an MOT application may require up to (2) weeks from the time that all required documents as stated above are received at the Traffic Engineering Division. Any rejected MOT submittal that is corrected and sent back to BCTED will be considered a new submittal, which may require up to two (2) additional weeks to approve. Additional time may be needed for more complex plans or plans requiring additional coordination/information.

BROWARD COUNTY FLORIDA
TRAFFIC ENGINEERING DIVISION

Maintenance of Traffic Application Form

Date_____ **Broward County Permit Number** (if required) _____-_____-_____

Contractor _____ **Address** _____

City _____ **State** _____ **Zip** _____ **Office #** _____

Mobile # _____ **Fax #** _____

Full name and Mobile # of 24 hr Contact Person _____

Name of Contractors working under this approval: _____

_____

Location of Project:_____ **City:**_____

Project Boundaries, From_____**To** _____

Description of Work:_____

_____

Proposed Start Date: _____ **Proposed Completion Date:**_____

Authorized Contractor's Representative

_____ _____ _____
(Print Name) **(Signature)** **(Date)**

A copy of the certification card(s) shall be included with every MOT Plan

_____ _____ _____ _____
(Print Name of Certified Person Submitting MOT) **(Level)** **(Signature)** **(Date)**

_____ _____ _____ _____
(Print Name of Certified Person Setting Up MOT) **(Level)** **(Signature)** **(Date)**

_____ _____ _____ _____
(Print Name of Certified Person Maintaining MOT) **(Level)** **(Signature)** **(Date)**

_____ _____ _____ _____
(Print Name of Certified Person in Charge of Flagging Operation MOT) **(Level)** **(Signature)** **(Date)**

The following document will be required prior to the approval of the MOT plan when signal equipment is impacted:

A filled out and signed form of ACCEPTANCE OF TRAFFIC SIGNAL MAINTENANCE AND TIMING BY CONTRACTOR DURING CONSTRUCTION AND BURN-IN PERIOD. The form can be downloaded under the category of Maintenance of Traffic in the webpage of

http://www.broward.org/Traffic/About/Pages/Publications.aspx

KEITH
Corporate Office
301 East Atlantic Boulevard
Pompano Beach, Florida 33060-6643
(954) 788-3400

Miami-Dade County
2160 NW 82 Avenue
Doral, Forida 33122

Palm Beach County
120 N Federal Highway, Suite 208
Lake Worth, Florida 33460

Orange County
2948 E Livingston Street
Orlando, Florida 32803

State of Florida Certificate of Authorization Number - 7928

BID / CONTRACT NO. :

REVISIONS

NO.	DESCRIPTION	DATE
1	PER DRC COMMENTS	6/8/2017
2	PER DRC COMMENTS	8/24/17

GUIDE TO USE THIS STANDARD:
1. Calculate the Total Panel Area and the centroid 'C' for an individual sign or a sign cluster.
2. Determine the height 'H' from the groundline for the individual sign or the cluster.
3. Consult the Post Size Table and find the intersection point.
4. Design the post and the foundation according to the required Post Size and Assembly Details.

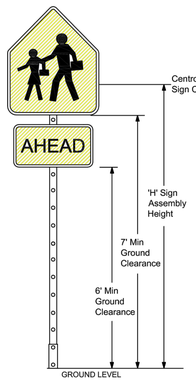

Post Size Table

Total Panel Area (sf)	'H' Sign Assembly Height (ft) (measure from ground) 8	8.5	9	9.5	10
3					
4					
5	Sign Post with 3" x 7 ga. Square Anchor				
6					
7					
8					
9					
10					
11					
12					
13	Sign Post with Triangular Slip Base Assembly				
14					
15					
16					
17					
18					
19	Two Post Installation Required with Triangular Slip Base				
20+					

Sign Post with 3" x 7 ga. Square Anchor

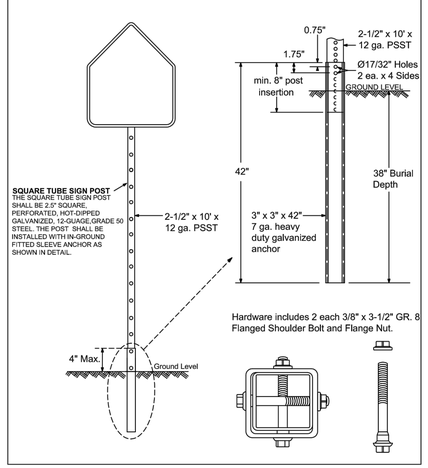

Sign Post with Triangular Slip Base

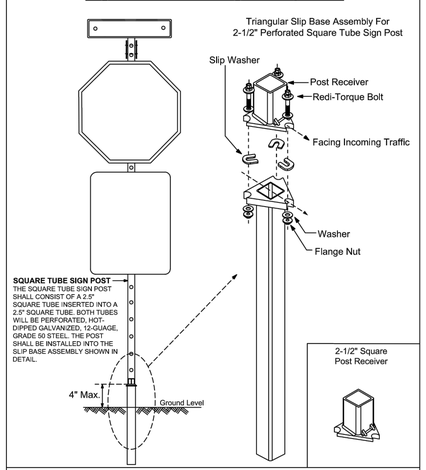

Note: Dimensions and certain details for the parts used to assemble the slip base connections are intentionally not shown. Slip base connections are patented manufactured products that are in compliance with NCHRP 350 crash test criteria. The base connection details are only shown on this plan to illustrate how the parts are assembled. The complete assembly must be designed to withstand 150 mph Base Wind Speed per 2013 AASHTO Standard Specifications for Structural Supports for Highway Signs, Luminaires, and Traffic Signals, 6th edition and interims.

REVISIONS	
DATE	DESCRIPTION
01-05-2016	N/A
03-21-2017	UPDATED POST SIZE

BROWARD COUNTY FLORIDA

PUBLIC WORKS DEPARTMENT
TRAFFIC ENGINEERING DIVISION

DESIGN BY: YVES D'ANJOU, P.E. | SCALE: NTS
DRAWN BY: STEPHON RAMOUTAR
CHECKED BY: ANDREW SEBO, P.E., PTOE

GROUND SIGN ASSEMBLY DETAILS

SHEET NO. 1 OF 1

ALL ON-SITE SIGNS SHALL BE IN ACCORDANCE WITH BROWARD COUNTY "STOP SIGN AND STREET IDENTIFICATION ASSEMBLY TYPICAL DETAILS".

ALL SIGNS WITHIN FDOT RIGHT-OF-WAY SHALL BE IN ACCORDANCE WITH FDOT INDEX 11860

LEDER HILLSBORO STORAGE

SCALE:	AS NOTED
DATE ISSUED:	JANUARY 31, 2018
DRAWN BY:	MG
DESIGNED BY:	MG
CHECKED BY:	SW

STEPHEN D. WILLIAMS, P.E.
FLORIDA REG. NO. 32090
(FOR THE FIRM)

SHEET TITLE
PAVEMENT MARKING AND SIGNAGE DETAILS

SHEET NUMBER
CM-502

SHEET 25 of 27

PROJECT NO. 09675.00

Drawing name: N:\09\09675.00 - Pet Lodge - Leder Group\Engineering\Cad\09675.00-CM-SX-X.dwg Layout Name: CM-502 Plotted by: MGrinbank Plotted on: Jun 15, 2018 - 5:27pm

FOR SIGN ASSEMBLIES WITH MAXIMUM 8.75 SQUARE FOOT PANEL AREA

FOR SIGN ASSEMBLIES WITH GREATER THAN 8.75 SQUARE FOOT PANEL AREA WITH SUPPLEMENTAL SIGN

Typical Details

Typical Details

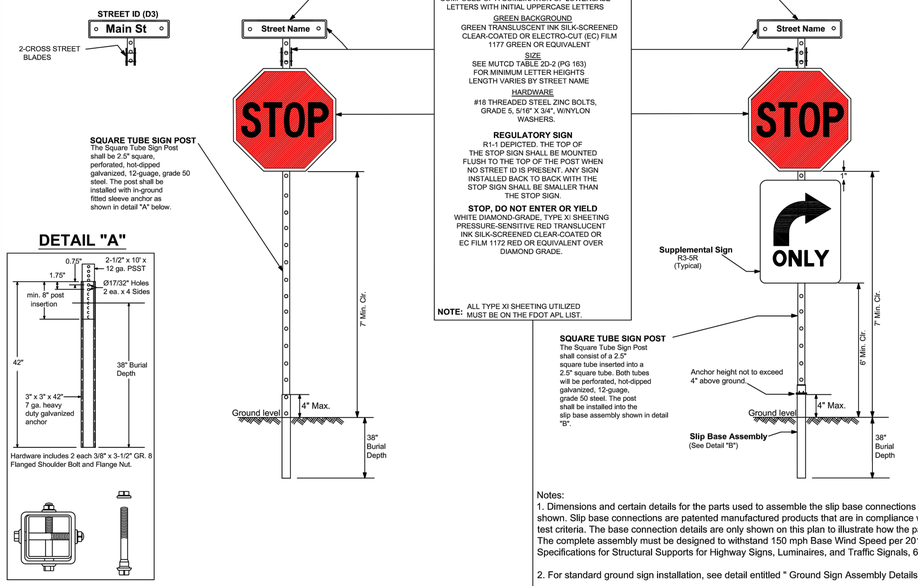

STREET ID MATERIALS:

BORDER AND LETTERS
SILVER DIAMOND GRADE
TYPE XI SHEETING
LETTERING OF STREET NAME SIGNS SHALL BE COMPOSED OF A COMBINATION OF LOWERCASE LETTERS WITH INITIAL UPPERCASE LETTERS

GREEN BACKGROUND
GREEN TRANSLUSCENT INK SILK-SCREENED CLEAR-COATED OR ELECTRO-CUT (EC) FILM 1177 GREEN OR EQUIVALENT

SIZE
SEE MUTCD TABLE 2D-2 (PG 163) FOR MINIMUM LETTER HEIGHTS
LENGTH VARIES BY STREET NAME

HARDWARE
#18 THREADED STEEL ZINC BOLTS, GRADE 5, 5/16" X 3/4", W/NYLON WASHERS.

REGULATORY SIGN
R1-1 DEPICTED. THE TOP OF THE STOP SIGN SHALL BE MOUNTED FLUSH TO THE TOP OF THE POST WHEN NO STREET ID IS PRESENT. ANY SIGN INSTALLED BACK TO BACK WITH THE STOP SIGN SHALL BE SMALLER THAN THE STOP SIGN.

STOP, DO NOT ENTER OR YIELD
WHITE DIAMOND-GRADE, TYPE XI SHEETING PRESSURE-SENSITIVE RED TRANSLUCENT INK SILK-SCREENED CLEAR-COATED OR EC FILM 1172 RED OR EQUIVALENT OVER DIAMOND GRADE.

NOTE: ALL TYPE XI SHEETING UTILIZED MUST BE ON THE FDOT APL LIST.

Notes:
1. Dimensions and certain details for the parts used to assemble the slip base connections are intentionally not shown. Slip base connections are patented manufactured products that are in compliance with NCHRP 350 crash test criteria. The base connection details are only shown on this plan to illustrate how the parts are assembled. The complete assembly must be designed to withstand 150 mph Base Wind Speed per 2013 AASHTO Standard Specifications for Structural Supports for Highway Signs, Luminaires, and Traffic Signals, 6th edition and interims.

2. For standard ground sign installation, see detail entitled " Ground Sign Assembly Details".

REVISIONS	
DATE	DESCRIPTION
06-07-2016	N/A
03-21-2017	UPDATED POST SIZE

BROWARD COUNTY FLORIDA

PUBLIC WORKS DEPARTMENT
TRAFFIC ENGINEERING DIVISION

DESIGN BY: CARMELO CARATOZZOLO, P.E. | SCALE: NTS
DRAWN BY: STEPHON RAMOUTAR
CHECKED BY: ANDREW SEBO, P.E., PTOE

STOP SIGN AND STREET IDENTIFICATION ASSEMBLY TYPICAL DETAILS

SHEET NO. 1 OF 1

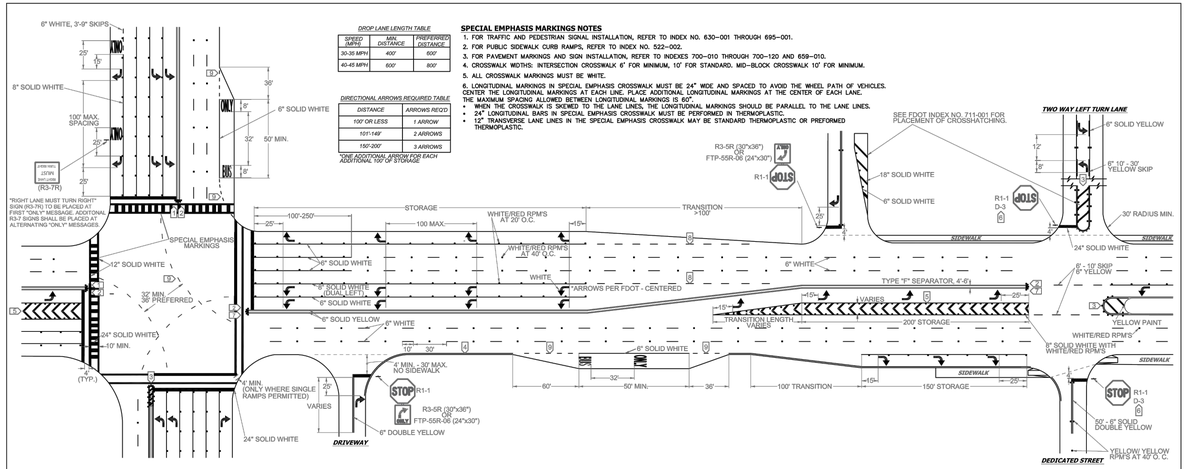

DROP LANE LENGTH TABLE

SPEED (MPH)	MIN. DISTANCE	PREFERRED DISTANCE
30-35 MPH	400'	600'
40-45 MPH	600'	800'

DIRECTIONAL ARROWS REQUIRED TABLE

DISTANCE	ARROWS REQ'D
100' OR LESS	1 ARROW
101'-149'	2 ARROWS
150'-200'	3 ARROWS

*ONE ADDITONAL ARROW FOR EACH ADDITIONAL 100' OF STORAGE.

SPECIAL EMPHASIS MARKINGS NOTES

1. FOR TRAFFIC AND PEDESTRIAN SIGNAL INSTALLATION, REFER TO INDEX NO. 630-001 THROUGH 695-001.
2. FOR PUBLIC SIDEWALK CURB RAMPS, REFER TO INDEX NO. 522-002.
3. FOR PAVEMENT MARKINGS AND SIGN INSTALLATION, REFER TO INDEXES 700-010 THROUGH 700-120 AND 659-010.
4. CROSSWALK WIDTHS: INTERSECTION CROSSWALK 6' FOR MINIMUM, 10' FOR STANDARD, MID-BLOCK CROSSWALK 10' FOR MINIMUM.
5. ALL CROSSWALK MARKINGS MUST BE WHITE.
6. LONGITUDINAL MARKINGS IN SPECIAL EMPHASIS CROSSWALK MUST BE 24" WIDE AND SPACED TO AVOID THE WHEEL PATH OF VEHICLES. CENTER THE LONGITUDINAL MARKINGS AT EACH LINE. PLACE ADDITIONAL LONGITUDINAL MARKINGS AT THE CENTER OF EACH LANE. THE MAXIMUM SPACING ALLOWED BETWEEN LONGITUDINAL MARKINGS IS 60".
   - WHEN THE CROSSWALK IS SKEWED TO THE LANE LINES, THE LONGITUDINAL MARKINGS SHOULD BE PARALLEL TO THE LANE LINES.
   - 24" LONGITUDINAL BARS IN SPECIAL EMPHASIS CROSSWALK MUST BE PERFORMED IN THERMOPLASTIC.
   - 12" TRANSVERSE LANE LINES IN THE SPECIAL EMPHASIS CROSSWALK MAY BE STANDARD THERMOPLASTIC OR PREFORMED THERMOPLASTIC.

NOTES

1. ALL PAVEMENT MARKINGS SHALL BE ALKYD BASED THERMOPLASTIC AND FULLY RETROREFLECTORIZED.
2. ALL PAVEMENT MARKINGS ON PAVER SYSTEMS SHALL BE 3M 380/381 SERIES TAPE OR EQUIVALENT AND APPLIED WITH P60 ADHESIVE AS PER MANUFACTURERS SPECIFICATIONS.
3. ALL PAVEMENT MARKINGS AND SIGNING SHALL BE IN ACCORDANCE WITH THE "MANUAL ON UNIFORM TRAFFIC CONTROL DEVICES", BCTED STANDARDS, AND FDOT DESIGN STANDARDS.
4. SEE FDOT INDEX NO 706-001 FOR PLACEMENT OF RPM's (FOR BULLNOSE RPM TREATMENT, SEE LEGEND NO. 1)
5. RPM's SHALL BE CLASS "B" OR EQUIVALENT, APPLIED WITH EPOXY OR BITUMINOUS ADHESIVE.
6. FDOT APPROVED SEALER SHALL BE USED WHEN APPLYING MARKINGS ON CONCRETE.
7. FOR BIKE LANE DETAILS SEE FDOT INDEX NO. 711-002.
8. MARKINGS IN AND ADJACENT TO BIKE LANES SHALL BE THERMOPLASTIC WITH A MIXTURE OF 50% GLASS SPHERES AND 50% SHARP SILICA SAND APPLIED AT A RATE DETERMINED BY THE MANUFACTURER'S SPECIFICATIONS.
9. EXISTING MARKINGS SHALL BE REMOVED BY WATER BLASTING OR SAND BLASTING.
10. ALL STOP LINES TO BE 4' BEHIND CROSSWALK OR SIDEWALK.
11. PAVEMENT MARKING REFLECTIVITY SHALL BE UNIFORM ACROSS THE ENTIRE STRIPE AND SHALL HAVE A MINIMUM REFLECTIVITY READING OF 250 MILLICANDELAS FOR WHITE AND 175 MILLICANDELAS FOR YELLOW.
12. ALL PRODUCTS MUST BE ON FDOT'S APPROVED PRODUCTS LIST (APL).

LEGEND

1 **YELLOW/YELLOW RPM DETAILS**
DIRECTION OF TRAVEL
CENTERLINE
DIC. 1' MIN TO CROSSWALK
REFLECTIVE YELLOW
DIRECTION OF TRAVEL

2 **MEDIAN NOSE PAINT DETAILS**
RAISED SEPARATOR — REFLECTIVE YELLOW — RADIUS POINT
GRASS MEDIAN — REFLECTIVE YELLOW — RADIUS POINT
POINT OF CURVE — GRASS MEDIAN — REFLECTIVE YELLOW — RADIUS POINT
DO NOT PAINT BRICK PAVERS

3 **PAINTED MEDIAN DETAILS**
DIRECTION OF TRAVEL
1' OC
6" SOLID DOUBLE YELLOW
YELLOW PAINT
18" SOLID YELLOW
YELLOW/YELLOW RPM's
DIRECTION OF TRAVEL

4 **EDGE LINE DETAILS**
6" SOLID WHITE OR YELLOW
EDGE OF PAVEMENT

5 **CHEVRON DETAILS - CROSSWALK AREAS AND IN FRONT OF CURB RAMPS**
DIRECTION OF TRAVEL
WHITE/RED RPM's
18" SOLID WHITE
6" SOLID WHITE
DIRECTION OF TRAVEL
(SEE FDOT INDEX NO. 17248 FOR SPACING OF CHEVRONS)

6 **STREET NAME BLADE DETAILS**
SEE BCTED STOP SIGN AND STREET IDENTIFICATION ASSEMBLY TYPICAL DETAILS.

7 **TYPE IV SEPARATOR DETAILS**
2'
6' - 12'
REFLECTIVE YELLOW PAINT
YELLOW/YELLOW RPM's
6" SOLID YELLOW
TYPE "F" CURB AND GUTTER

8 **6'-10' SKIP DETAILS**
6' - 10' SKIPS 6" WHITE SHALL BE USED FOR THE FOLLOWING CONDITIONS:
- HORIZONTAL CURVE SECTIONS
- TRANSITIONS BETWEEN LANE ALIGNMENT
- TRANSITIONS GREATER THAN 100'

9 **2'-4' SKIP DETAILS**
2' - 4' SKIPS 6" WHITE SHALL BE USED FOR THE FOLLOWING CONDITIONS:
- RADIUS GUIDE LINES BETWEEN DUAL LEFTS TURN MOVEMENT (60' RADIUS PREFERRED OR AS NOTED ON PLANS)
- BUS BAY TRANSITIONS

STOP SIGN NOTE
WHERE SIDE ROADS INTERSECT A MULTI LANE STREET OR HIGHWAY THAT HAS A SPEED LIMIT OF 45 MPH OR HIGHER, THE MINIMUM SIZE OF THE STOP SIGNS FACING THE SIDE ROAD APPROACHES, EVEN IS THE SIDE ROAD ONLY HAS ONE APPROACH LANE, SHALL BE 36"X36".

WHERE SIDE ROADS INTERSECT A MULTI-LANE (INCLUDING TURN LANE) STREET OR HIGHWAY THAT HAS A SPEED LIMIT OF 40 MPH OR LOWER, THE MINIMUM SIZE OF THE STOP SIGN FACING THE SIDE ROAD APPROACHES SHALL BE 36"X36".

REVISIONS	
DATE	DESCRIPTION
01-15-2016	N/A
06-11-2018	UPDATED FDOT INDEX REFERENCE

BROWARD COUNTY FLORIDA

PUBLIC WORKS DEPARTMENT
TRAFFIC ENGINEERING DIVISION

DESIGN BY: CARMELO CARATOZZOLO, P.E. | SCALE: NTS
DRAWN BY: STEPHON RAMOUTAR
CHECKED BY: ANDREW SEBO, P.E., PTOE

PAVEMENT MARKINGS AND SIGNS DETAILS

SHEET NO. 1 OF 1

Map Legend

- Traffic Controller Cabinet
- Ground Mounted Junction Box
- Pole Mounted Junction Box
- Systems Data Communicatons Cable, Aerial - BCTEDCO
- Systems Data Communications Cable, Underground - BCTEDCO
- Systems Data Communicatons Cable, Gaps to be filled
- Systems Data Communicatons Cable, empty conduit
- VMS - Electrical Feeds
- BellSouth Data Circuit (Drop)
- Cellular Data Circuit
- Aerial-to-Underground transition
- System's pull box (standard)
- Communications cable cut
- VMS - MAST ARMS
- VMS - CONTROL CABINET
- School Flasher

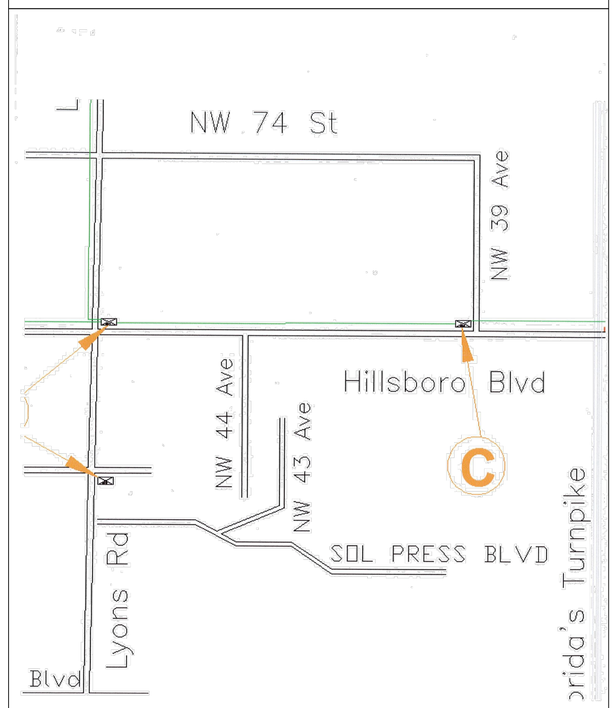

ALL ON-SITE SIGNS SHALL BE IN ACCORDANCE WITH BROWARD COUNTY "STOP SIGN AND STREET IDENTIFICATION ASSEMBLY TYPICAL DETAILS".

ALL SIGNS WITHIN FDOT RIGHT-OF-WAY SHALL BE IN ACCORDANCE WITH FDOT INDEX 11860

KEITH
Corporate Office
301 East Atlantic Boulevard
Pompano Beach, Florida 33060-6643
(954) 788-3400

Miami-Dade County
2160 NW 82 Avenue
Doral, Forida 33122

Palm Beach County
120 N Federal Highway, Suite 208
Lake Worth, Florida 33460

Orange County
2948 E Livingston Street
Orlando, Florida 32803

State of Florida Certificate of Authorization Number - 7928

BID / CONTRACT NO. :

REVISIONS

NO.	DESCRIPTION	DATE
1	PER DRC COMMENTS	6/8/2017
2	PER DRC COMMENTS	8/24/17
3	PER BCTED COMMENTS	6/11/18

LEDER HILLSBORO STORAGE

SCALE:	AS NOTED
DATE ISSUED:	JANUARY 31, 2018
DRAWN BY:	MG
DESIGNED BY:	MG
CHECKED BY:	SW

STEPHEN D. WILLIAMS, P.E.
FLORIDA REG. NO. 32090
(FOR THE FIRM)

SHEET TITLE
PAVEMENT MARKING AND SIGNAGE DETAILS

SHEET NUMBER
CM-503

SHEET 25 of 27

PROJECT NO. 09675.00

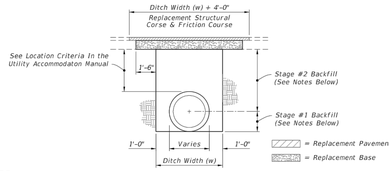

NOTES:

PAVEMENT REMOVAL AND REPLACEMENT

1. Pavement shall be mechanically sawed.
2. The replacement asphalt shall match the existing structural and friction courses for type and thickness in accordance with current FDOT asphalt mix specifications.
3. The new base materials shall be either of the same type and composition as the materials removed or of equal or greater structural adequacy (See Index No. 514).

BACKFILL OPTION

1. COMPACTED AND STABILIZED FILL
   A. Backfill material shall be placed in accordance with Section 125 of the Standard Specifications.
   B. In Stage #1, construct compacted fill beneath the haunches of the pipe, using mechanical tamps suitable for this purpose. This compaction applies to the material placed beneath the haunches of the pipe and above any bedding.
   C. In Stage #2, construct compacted fill along the sides of the pipe and up to the bottom of the base, with the upper 12" receiving Type B Stabilization. In lieu of Type B Stabilization, the Contractor may construct using Optional Base Group 3.
2. FLOWABLE FILL
   A. If compaction can not be achieved through normal mechanical methods then flowable fill may be used.
   B. Flowable fill is to be placed in accordance with Section 121 of the Specifications, as approved by the Engineer.
   C. Do not allow the utility being installed to float. If a method is provided to prevent flotation from occurring, Stages #1 and #2 can be combined, if approved by the Engineer.
   D. In Stage #1, place flowable fill midway up on both sides of the utility. Allow to harden before placing Stage #2.
   E. In Stage #2, place flowable fill to the bottom of the existing base course.

FLEXIBLE PAVEMENT CUT

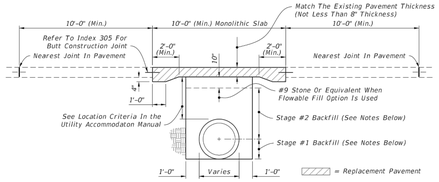

NOTES:

PAVEMENT REMOVAL AND REPLACEMENT

1. High early strength cement concrete (3000 psi) meeting the requirements of Standard Specification 346 shall be used for rigid pavement replacement.
2. Pavement shall be mechanically sawed and restored to conform with existing pavement joints within 12 hours. (See Index 305)

BACKFILL OPTION

1. GRANULAR BACKRILL
   A. Any edgedrain system that is removed shall be replaced with the same type materials. Any edgedrain system that is damaged shall be repaired with methods approved by the Engineer.
   B. Fill material shall be placed in accordance with the Standard Specifications. Fill material shall be special select soil in accordance with Index 505.
   C. In Stage #1, construct compacted fill beneath the haunches of the pipe, using mechanical tamps suitable for this purpose. This compaction applies to the material placed beneath the haunches of the pipe and above any bedding.
   D. In Stage #2, construct fill along the sides of the pipe and up to the bottom of replacement pavement.
2. FLOWABLE FILL
   A. If mechanical compaction can not be achieved through normal mechanical methods then flowable fill may be used.
   B. Flowable fill is to be placed in accordance with Section 121 of the Specifications, as approved by the Engineer.
   C. Do not allow the utility being installed to float. If a method is provided to prevent flotation from occurring, Stages #1 and #2 can be combined, if approved by the Engineer.
   D. In Stage #1, place flowable fill midway up on both sides of the utility. Allow to harden before placing Stage #2.
   E. In Stage #2, place flowable fill to the bottom of the stone layer.

RIGID PAVEMENT CUT

GENERAL NOTES

1. The details provided in this standard index apply to cases in which jack and bore or directional boring methods are not required by the Engineer.
2. Flowable fill shall not be placed directly over loose, or high plastic, or muck material (see Index 505) which will cause settlement due to fill weight. Where highly compressible material exists, the amount, shape and depth of Flowable fill must be engineered to prevent pavement settlement.
3. These details do not apply to utility cuts longitudinal to the centerline of the roadway which may require the additional use of geotextiles, special bedding and backfill, or other special requirements.
4. Method of construction must be approved by the Engineer.
5. Some pipe may require special granular backfill up to 6" above top of pipe. Geotextiles may be required to encapsulate the special granular material.
6. Where asphalt concrete overlays exist over full slab concrete pavement, the replacement pavement shall have an overlay constructed over the replacement slab. The overlay shall match the existing asphalt pavement thickness. The replacement friction course shall match the existing friction course, except structural course may be used in lieu of dense graded friction course.
7. All shoulder pavement, curb, curb and gutter, and their substructure disturbed by utility trench cut construction shall be restored in kind.
8. The use of Flowable fill to reduce the time traffic is taken off a facility is acceptable but must have prior approval by the Engineer. Flowable fill use is allowed only when properly engineered for pavement crossings, whether straight or diagonal, and shall not be installed for significant depths or lengths. The maximum length shall be fifty (50) feet and a maximum depth of six (6) feet unless supported by an engineering document prepared by a registered professional engineer that specializes in soils engineering. The engineering document shall address the evaluation of local groundwater flow interruption and settlement potential.
9. Excavatable flowable fill is to be used when the flowable fill option is selected.

TRENCH CUTS AND RESTORATIONS ACROSS ROADWAYS

LAST REVISION	REVISION	DESCRIPTION:	FDOT FY 2017-18 DESIGN STANDARDS	MISCELLANEOUS UTILITY DETAILS	INDEX NO.	SHEET NO.
11/01/16					307	1 of 3

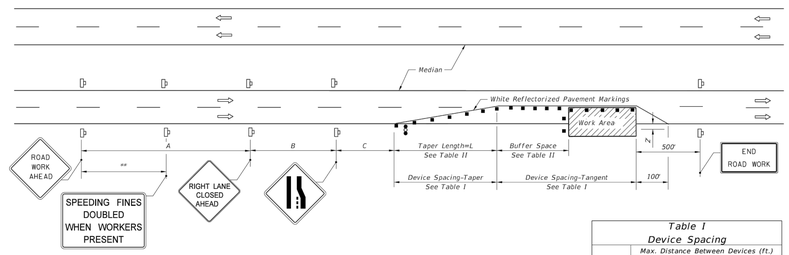

DISTANCE BETWEEN SIGNS

Speed	Spacing (ft.) A	B	C
40 mph or less	200	200	200
45 mph	350	350	350
50 mph	500	500	500
*55 mph or greater	2640	1640	1000

* The ROAD WORK 1 MILE sign may be used as an alternate to the ROAD WORK AHEAD sign and the RIGHT LANE CLOSED ½ MILE sign may be used as an alternate to the RIGHT LANE CLOSED AHEAD sign.

** 500' beyond the ROAD WORK AHEAD sign or midway between signs whichever is less.

SYMBOLS

- Work Area
- Channelizing Device (See Index No. 600)
- Work Zone Sign
- Advance Warning Arrow Board

GENERAL NOTES

1. Work operations shall be confined to one traffic lane, leaving the adjacent lane open to traffic.
2. On undivided highways the median signs as shown are to be omitted.
3. When work is performed in the median lane on divided highways, the channelizing device plan is inverted and left lane closed and lane ends signs substituted for the right lane closed and lane end signs.

   The same applies to undivided highways with the following exceptions:
   a. Work shall be confined within one median lane.
   b. Additional barricades, cones, or drums shall be placed along the centerline abutting the work area and across the trailing end of the work area.

   When work on undivided highways occurs across the centerline so as to encroach on both median lanes, the inverted plan is applied to the approach of both roadways.
4. Signs and traffic control devices are to be modified in accordance with INTERMITTENT WORK STOPPAGE details (sheet 2 of 2) when no work is being performed and the highway is open to traffic.
5. The two channelizing devices directly in front of the work area may be omitted provided vehicles in the work area have high-intensity rotating, flashing, oscillating, or strobe lights operating.
6. When paved shoulders having a width of 8 ft. or more are closed, channelizing devices shall be used to close the shoulder in advance of the merging taper to direct vehicular traffic to remain within the travel way. See Index No. 612 for shoulder taper formulas.
7. When a side road intersects the highway within the TTC zone, additional TTC devices shall be placed in accordance with other applicable TCZ Indexes.
8. This TCZ plan does not apply when work is being performed in the middle lane(s) of a six or more lane highway. See Index No. 614.
9. For general TCZ requirements and additional information, refer to Index No. 600.

Table I
Device Spacing

Speed (mph)	Max. Distance Between Devices (ft.) Cones or Tubular Markers: Taper	Tangent	Type I or Type II Barricades or Vertical Panels or Drums: Taper	Tangent
25	25	50	25	50
30 to 45	25	50	30	50
50 to 70	25	50	50	100

Table II
Buffer Space and Taper Length

Speed (mph)	Buffer Space Dist. (ft.)	Taper Length (12' Lateral Transition) L (ft.)	Notes (Merge)
25	155	125	
30	200	180	$L = \frac{WS^2}{60}$
35	250	245	
40	305	320	
45	360	540	
50	425	600	
55	495	660	L = WS
60	570	720	
65	645	780	
70	730	840	

When Buffer Space cannot be attained due to geometric constraints, the greatest attainable length shall be used, but not less than 200 ft.

For lateral transitions other than 12', use formula for L shown in notes column.
Where:

L = Length of taper in feet
W = Width of lateral transition in feet
S = Posted speed limit (mph)

DURATION NOTES

1. Temporary white edgeline may be omitted for work operations less than 3 consecutive calandar days.
2. For work operations up to approximately 15 minutes, signs, channelizing devices, arrow board, and buffer space may be omitted if all of the following conditions are met:
   a. Speed limit is 45 mph or less.
   b. No sight obstructions to vehicles approaching the work area for a distance equal to the buffer space and the taper length combined.
   c. Volume and complexity of the roadway has been considered.
   d. The closed lane is occupied by a class 5 or larger, medium duty truck(s) with a minimum gross weight vehicle rating (GWVR) of 16,001 lb with high-intensity, rotating, flashing, oscillating, or strobe lights mounted above the cab height and operating.
3. For work operations up to 60 minutes, arrow board and buffer space may be omitted if conditions a, b, and c in DURATION NOTE 2 are met, and vehicles in the work area have high-intensity, rotating, flashing, oscillating, or strobe lights operating.

CONDITIONS

WHERE ANY VEHICLE, EQUIPMENT, WORKERS OR THEIR ACTIVITIES ENCROACH ON THE LANE ADJACENT TO EITHER SHOULDER AND THE AREA 2' OUTSIDE THE EDGE OF TRAVEL WAY.

LAST REVISION	REVISION	DESCRIPTION:	FDOT FY 2017-18 DESIGN STANDARDS	MULTILANE, WORK WITHIN TRAVEL WAY MEDIAN OR OUTSIDE LANE	INDEX NO.	SHEET NO.
01/01/16					613	1 of 2

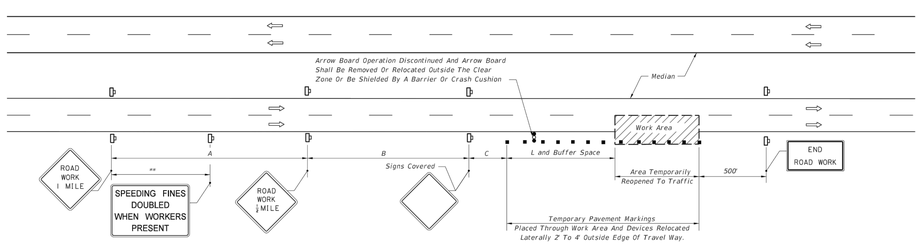

EVEN PAVEMENT

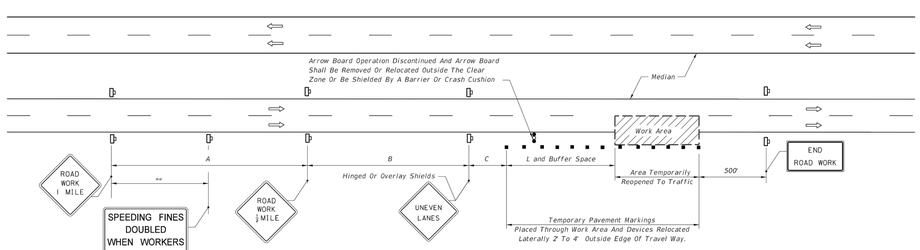

UNEVEN PAVEMENT

INTERMITTENT WORK STOPPAGE - LANE REOPENED TO TRAFFIC

LAST REVISION	REVISION	DESCRIPTION:	FDOT FY 2017-18 DESIGN STANDARDS	MULTILANE, WORK WITHIN TRAVEL WAY MEDIAN OR OUTSIDE LANE	INDEX NO.	SHEET NO.
07/01/15					613	2 of 2

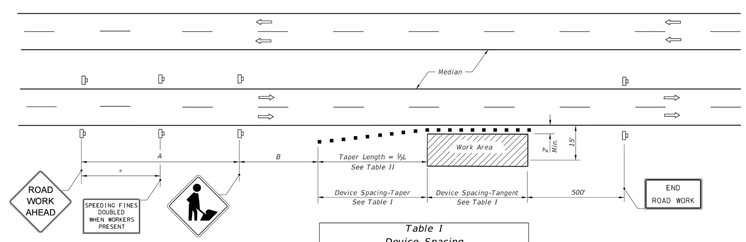

DISTANCE BETWEEN SIGNS

Speed	Spacing (ft.) A	B
40 mph or less	200	200
45 mph	350	350
50 mph or greater	500	500

* 250' beyond the ROAD WORK AHEAD sign or midway between signs whichever is less.

Table I
Device Spacing

Speed (mph)	Max. Distance Between Devices (ft.) Cones or Tubular Markers: Taper	Tangent	Type I or Type II Barricades or Vertical Panels or Drums: Taper	Tangent
25	25	50	25	50
30 to 45	25	50	30	50
50 to 70	25	50	50	100

Table II
Taper Length - Shoulder

Speed (mph)	½L (ft.) 8' Shldr.	10' Shldr.	12' Shldr.	Notes
25	28	35	42	
30	40	50	60	$L = \frac{WS^2}{60}$
35	55	68	82	
40	72	90	107	
45	120	150	180	
50	133	167	200	
55	147	183	220	L=WS
60	160	200	240	
65	173	217	260	
70	187	233	280	

8' minimum shoulder width.

½L = Length of shoulder taper in feet

W = Width of total shoulder in feet (combined paved and unpaved width)

S = Posted speed limit (mph)

SYMBOLS

- Work Area
- Channelizing Device (See Index No. 600)
- Work Zone Sign
- Lane Identification + Direction of Traffic

GENERAL NOTES

1. When a high volume of work vehicles are entering and leaving the Work Area at speeds slower than 10 MPH below the posted speed, place an MOT-S-06 sign in the ROAD WORK AHEAD sign location and shift the ROAD WORK AHEAD sign upstream 500 ft.
2. This TCZ plan also applies to work performed in the median more than 2' but less than 15' from the edge of travelway.
3. When work is being performed on a multilane undivided roadway the signs normally mounted in the median (as shown) shall be omitted.
4. WORKERS signs to be removed or fully covered when no work is being performed.
5. SHOULDER WORK sign may be used as an alternate to the WORKER symbol sign.
6. When a side road intersects the highway within the TTC zone, additional TTC devices shall be placed in accordance with other applicable TCZ Indexes.
7. For general TCZ requirements and additional information, refer to Index No. 600.

DURATION NOTES

1. Signs and channelizing devices may be omitted if all of the following conditions are met:
   a. Work operations are 60 minutes or less.
   b. Vehicles in the work area have high-intensity, rotating, flashing, oscillating, or strobe lights operating.

CONDITIONS

WHERE ANY VEHICLE, EQUIPMENT, WORKERS OR THEIR ACTIVITIES ENCROACH THE AREA CLOSER THAN 15' BUT NOT CLOSER THAN 2' TO THE EDGE OF TRAVEL WAY.

LAST REVISION	REVISION	DESCRIPTION:	FDOT FY 2017-18 DESIGN STANDARDS	MULTILANE, WORK ON SHOULDER	INDEX NO.	SHEET NO.
01/01/16					612	1 of 1

KEITH
Corporate Office
301 East Atlantic Boulevard
Pompano Beach, Florida 33060-6643
(954) 788-3400

Miami-Dade County
2160 NW 82 Avenue
Doral, Forida 33122

Palm Beach County
120 N Federal Highway, Suite 208
Lake Worth, Florida 33460

Orange County
2948 E Livingston Street
Orlando, Florida 32803

State of Florida Certificate of Authorization Number - 7928

BID / CONTRACT NO. :

REVISIONS

NO.	DESCRIPTION	DATE
1	PER DRC COMMENTS	6/8/2017
2	PER DRC COMMENTS	8/24/17

LEDER HILLSBORO STORAGE

SCALE:	AS NOTED
DATE ISSUED:	JANUARY 31, 2018
DRAWN BY:	MG
DESIGNED BY:	MG
CHECKED BY:	SW

STEPHEN D. WILLIAMS, P.E.
FLORIDA REG. NO. 32090
(FOR THE FIRM)

SHEET TITLE

MAINTENANCE OF TRAFFIC

SHEET NUMBER

CT-501

SHEET 26 of 27

PROJECT NO. 09675.00

Drawing name: N:\09\09675.00 - Pet Lodge - Leder Group\Engineering\Cadd\09675.00-CT-5XX.dwg Layout Name: CT-501 Plotted by: MGrimbeck Plotted on: Jun 15, 2018 - 5:27pm