BCEDP NO.

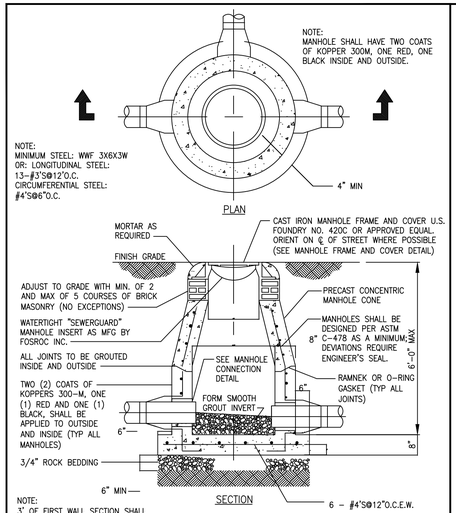

Date	Revisions	Appr. by	CITY OF COCONUT CREEK UTILITIES AND ENGINEERING DEPARTMENT			
			CONCENTRIC PRECAST MANHOLE DETAIL (6'-0" AND UNDER)			
			Date:	Scale: N.T.S.	Dwg: F200	Fig: 200

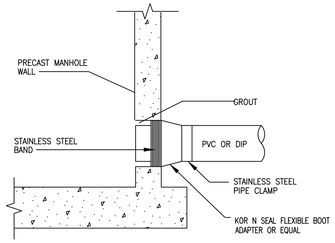

STANDARD PRECAST MANHOLE PIPE CONNECTION

NOTES:
1. THE CITY MAY APPROVE ALTERNATE WATER TIGHT CONNECTION DETAILS FOR CONNECTION OF 24" DIAMETER PIPES AND LARGER.
2. AN OUTSIDE DROP CONNECTION SHALL BE REQUIRED FOR ALL INFLUENT PIPES WHICH HAVE AN INVERT 2' OR MORE ABOVE THE MANHOLE BOTTOM.

Date	Revisions	Appr. by	CITY OF COCONUT CREEK UTILITIES AND ENGINEERING DEPARTMENT			
			MANHOLE CONNECTION DETAIL (WITH BUILT-IN RUBBER BOOT)			
			Date:	Scale: N.T.S.	Dwg: F201	Fig: 201

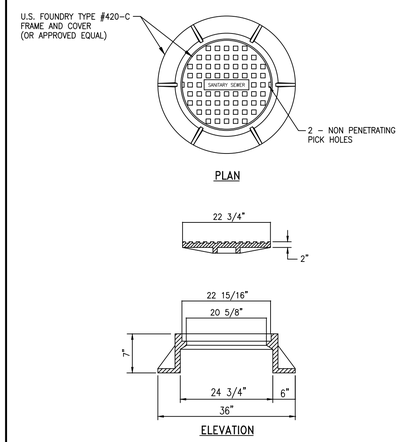

Date	Revisions	Appr. by	CITY OF COCONUT CREEK UTILITIES AND ENGINEERING DEPARTMENT			
			SANITARY MANHOLE COVER			
			Date:	Scale: N.T.S.	Dwg: F203	Fig: 203

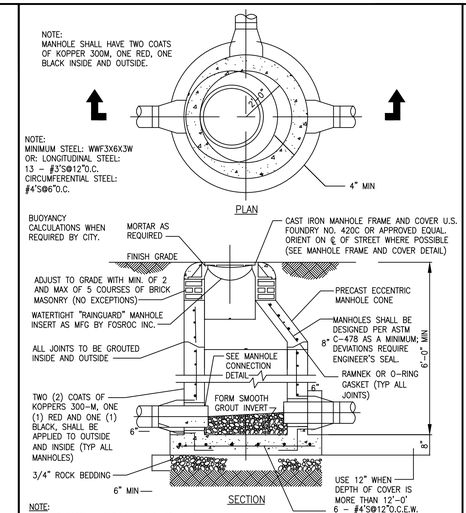

Date	Revisions	Appr. by	CITY OF COCONUT CREEK UTILITIES AND ENGINEERING DEPARTMENT			
			ECCENTRIC PRECAST MANHOLE DETAIL (6'-0" DEPTH AND GREATER)			
			Date:	Scale: N.T.S.	Dwg: F200A	Fig: 200A

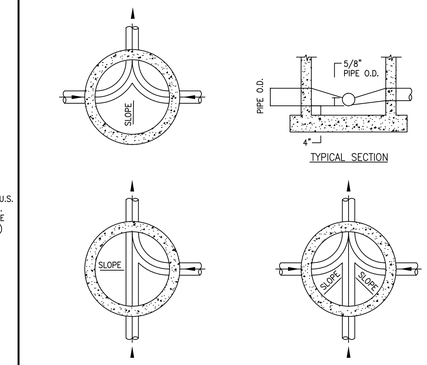

NOTES:
1. INVERT CHANNELS TO BE CONSTRUCTED FOR SMOOTH FLOW WITH NO OBSTRUCTIONS.
2. SPILLWAYS SHALL BE CONSTRUCTED BETWEEN PIPES WITH DIFFERENT INVERT ELEVATIONS PROVIDING FOR SMOOTH FLOWS.
3. CHANNELS TO BE FORMED IN ALL MANHOLES TO ACCEPT T.V. CAMERA.
4. WHEN DIRECTIONAL CHANNELS EXCEEDING 45-DEGREES OCCUR, AN EXTRA FLOW LINE ELEVATION DROP OF 0.05-FT ACROSS THE MANHOLE SHALL BE PROVIDED.

Date	Revisions	Appr. by	CITY OF COCONUT CREEK UTILITIES AND ENGINEERING DEPARTMENT			
			MANHOLE FLOW CHANNEL DETAIL			
			Date:	Scale: N.T.S.	Dwg: F200B	Fig: 200B

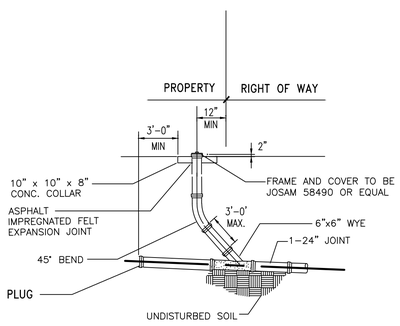

Date	Revisions	Appr. by	CITY OF COCONUT CREEK UTILITIES AND ENGINEERING DEPARTMENT			
			SANITARY SERVICE CLEANOUT DETAIL			
			Date:	Scale: N.T.S.	Dwg: F206	Fig: 206

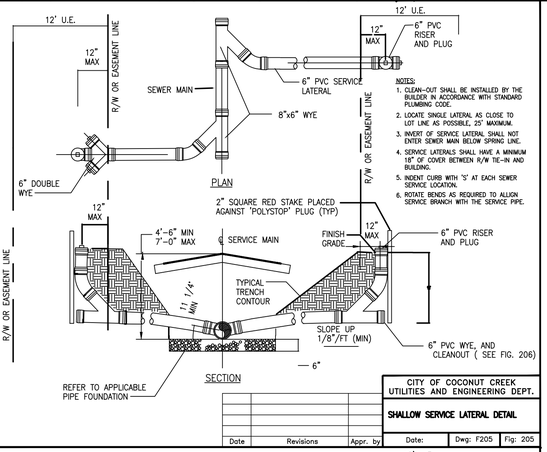

NOTES:
1. CLEAN-OUT SHALL BE INSTALLED BY THE BUILDER IN ACCORDANCE WITH STANDARD PLUMBING CODE.
2. LOCATE SINGLE LATERAL AS CLOSE TO LOT LINE AS POSSIBLE, 25' MAXIMUM.
3. INVERT OF SERVICE LATERAL SHALL NOT ENTER SEWER MAIN BELOW SPRING LINE.
4. SERVICE LATERALS SHALL HAVE A MINIMUM 18" OF COVER BETWEEN R/W TIE-IN AND BUILDING.
5. INDENT CURB WITH 'S' AT EACH SEWER SERVICE LOCATION.
6. ROTATE BENDS AS REQUIRED TO ALLIGN SERVICE BRANCH WITH THE SERVICE PIPE.

Date	Revisions	Appr. by	CITY OF COCONUT CREEK UTILITIES AND ENGINEERING DEPT.			
			SHALLOW SERVICE LATERAL DETAIL			
			Date:	Dwg: F205	Fig: 205	

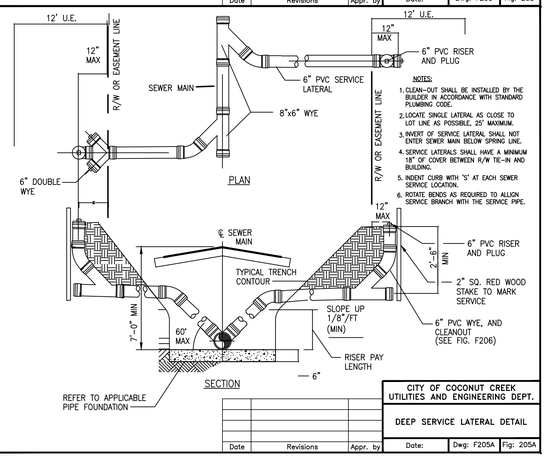

NOTES:
1. CLEAN-OUT SHALL BE INSTALLED BY THE BUILDER IN ACCORDANCE WITH STANDARD PLUMBING CODE.
2. LOCATE SINGLE LATERAL AS CLOSE TO LOT LINE AS POSSIBLE, 25' MAXIMUM.
3. INVERT OF SERVICE LATERAL SHALL NOT ENTER SEWER MAIN BELOW SPRING LINE.
4. SERVICE LATERALS SHALL HAVE A MINIMUM 18" OF COVER BETWEEN R/W TIE-IN AND BUILDING.
5. INDENT CURB WITH 'S' AT EACH SEWER SERVICE LOCATION.
6. ROTATE BENDS AS REQUIRED TO ALLIGN SERVICE BRANCH WITH THE SERVICE PIPE.

Date	Revisions	Appr. by	CITY OF COCONUT CREEK UTILITIES AND ENGINEERING DEPT.			
			DEEP SERVICE LATERAL DETAIL			
			Date:	Dwg: F205A	Fig: 205A	

REVISIONS	DATE	BY
REV PER CITY	05/13/19	BAH
REV PER CITY; SITE PLAN COMMENTS	04/04/19	NJA

FILE NAME 8281ENG.DWG

CAULFIELD & WHEELER, INC.
CIVIL ENGINEERING - LAND PLANNING
LANDSCAPE ARCHITECTURE - SURVEYING
7900 GLADES ROAD - SUITE 100
BOCA RATON, FLORIDA 33434
PHONE (561)392-1991 / FAX (561)750-1452

LYONS EXCHANGE CENTER
COCONUT CREEK, FLORIDA
WATER DISTRIBUTION & SANITARY SEWER DETAILS

COCONUT CREEK, FLORIDA

DATE	6/26/18
DRAWN BY	BAH
F.B./ PG.	N/A
SCALE	N.T.S.

JOHN F. WHEELER
PROFESSIONAL ENGINEER
LICENSE NO. 25478
STATE OF FLORIDA
ENG NO. EB-0003591
DATE

JOB # 8281
SHT.NO.
WS-5
OF 15 SHEETS

Drawing: P:\8281-00-001\drawings\eng\details\8281B-S_DETAILS.dwg\W-S-DTALS_SHT_WS-5